PRO-FORM® ZT 10

www.proform.com

Model No. PFTL10113.0
Serial No. _____

Write the serial number in the space above for reference.

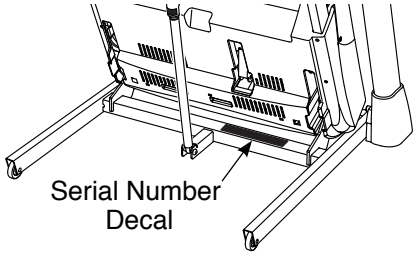

ACTIVATE YOUR WARRANTY

To register your product and activate your warranty today, go to www.proformservice.com/registration.

CUSTOMER CARE

For service at any time, go to www.proformservice.com.

Or call 1-888-533-1333
Mon.–Fri. 6 a.m.–6 p.m. MT
Sat. 8 a.m.–12 p.m. MT

Please do not contact the store.

⚠ CAUTION

Read all precautions and instructions in this manual before using this equipment. Save this manual for future reference.

USER'S MANUAL

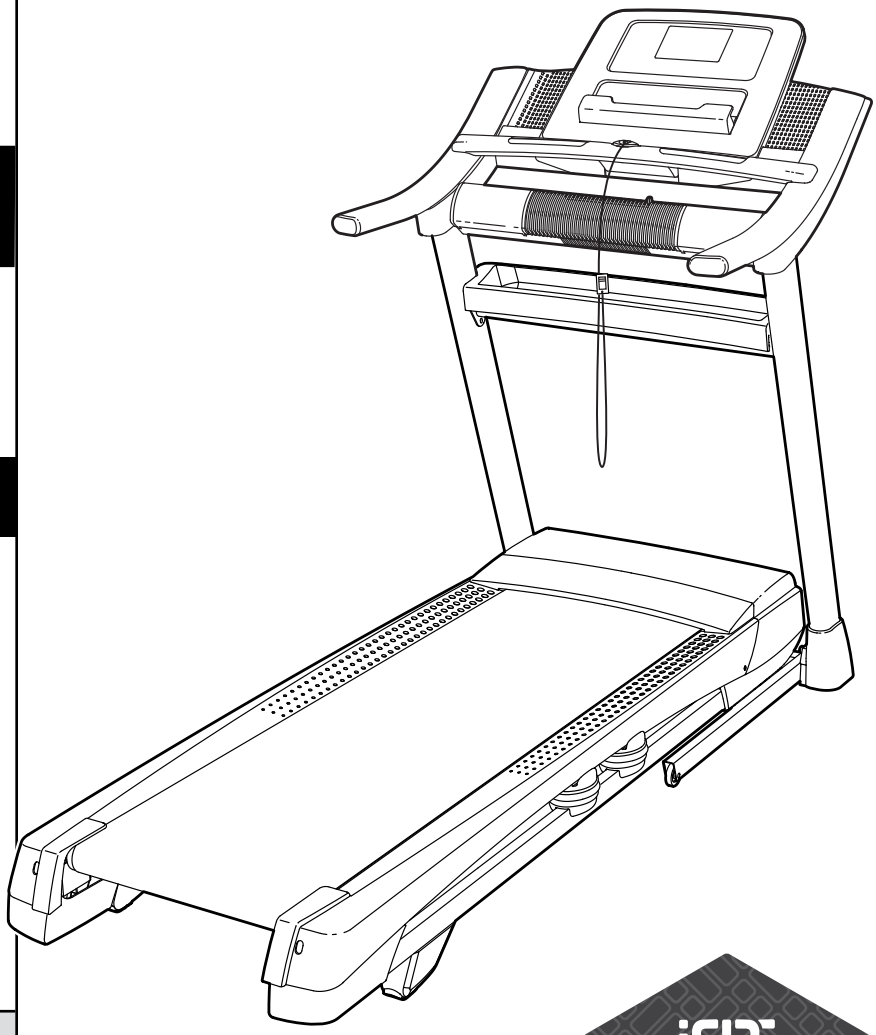

iFIT
MAKE YOUR FITNESS GOALS A REALITY
IFIT.COM

TABLE OF CONTENTS

WARNING DECAL PLACEMENT 2
IMPORTANT PRECAUTIONS 3
BEFORE YOU BEGIN 7
PART IDENTIFICATION CHART 8
ASSEMBLY 9
THE CHEST HEART RATE MONITOR 17
OPERATION AND ADJUSTMENT 18
HOW TO FOLD AND MOVE THE TREADMILL 27
TROUBLESHOOTING 28
EXERCISE GUIDELINES 31
PART LIST 34
EXPLODED DRAWING 36
ORDERING REPLACEMENT PARTS . . . . . Back Cover
LIMITED WARRANTY . . . . . Back Cover

WARNING DECAL PLACEMENT

This drawing shows the locations of the warning decals. **If a decal is missing or illegible, call the telephone number on the front cover of this manual and request a free replacement decal. Apply the decal in the location shown.** Note: The decals may not be shown at actual size.

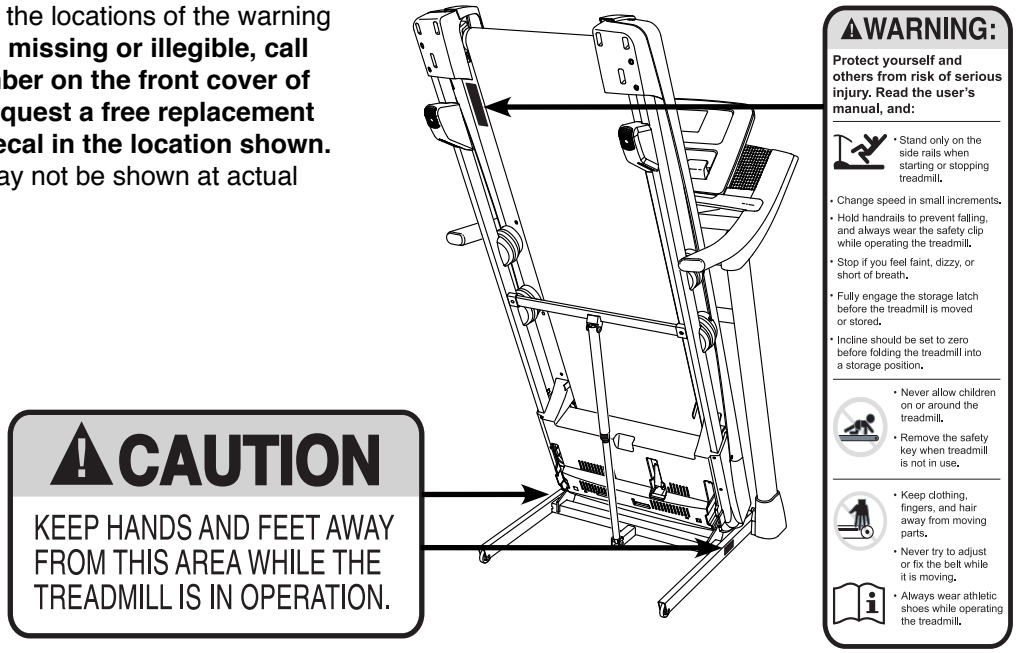

PROFORM is a registered trademark of ICON IP, Inc.

IMPORTANT PRECAUTIONS

⚠WARNING: To reduce the risk of burns, fire, electric shock, or injury to persons, read all important precautions and instructions in this manual and all warnings on your treadmill before using your treadmill. ICON assumes no responsibility for personal injury or property damage sustained by or through the use of this product.

1. It is the responsibility of the owner to ensure that all users of this treadmill are adequately informed of all warnings and precautions.

2. Before beginning any exercise program, consult your physician. This is especially important for persons over age 35 or persons with pre-existing health problems.

3. Use the treadmill only as described in this manual.

4. The treadmill is intended for home use only. Do not use the treadmill in any commercial, rental, or institutional setting.

5. Keep the treadmill indoors, away from moisture and dust. Do not put the treadmill in a garage or covered patio, or near water.

6. Place the treadmill on a level surface, with at least 8 ft. (2.4 m) of clearance behind it and 2 ft. (0.6 m) on each side. Do not place the treadmill on any surface that blocks air openings. To protect the floor or carpet from damage, place a mat under the treadmill.

7. Do not operate the treadmill where aerosol products are used or where oxygen is being administered.

8. Keep children under age 12 and pets away from the treadmill at all times.

9. The treadmill should be used only by persons weighing 350 lbs. (159 kg) or less.

10. Never allow more than one person on the treadmill at a time.

11. Wear appropriate exercise clothes while using the treadmill. Do not wear loose clothes that could become caught in the treadmill. Athletic support clothes are recommended for both men and women. *Always wear athletic shoes. Never use the treadmill with bare feet, wearing only stockings, or in sandals.*

12. Plug the power cord into a surge suppressor (not included), and plug the surge suppressor into an appropriate outlet (see page 18). To avoid overloading the circuit, do not plug other electrical devices, except for low-power devices such as cell phone chargers, into the surge suppressor or into an outlet on the same circuit.

13. Use only a surge suppressor that meets all of the specifications described on page 18. To purchase a surge suppressor, see your local PROFORM dealer, call the telephone number on the front cover of this manual, or see your local electronics store.

14. Failure to use a properly functioning surge suppressor could result in damage to the control system of the treadmill. If the control system is damaged, the walking belt may slow, accelerate, or stop unexpectedly, which may result in a fall and serious injury.

15. Keep the power cord and the surge suppressor away from heated surfaces.

16. Never move the walking belt while the power is turned off. Do not operate the treadmill if the power cord or plug is damaged, or if the treadmill is not working properly. (See TROUBLESHOOTING on page 28 if the treadmill is not working properly.)

17. Read, understand, and test the emergency stop procedure before using the treadmill (see HOW TO TURN ON THE POWER on page 20).

18. Never start the treadmill while you are standing on the walking belt. Always hold the handrails while using the treadmill.

19. The treadmill is capable of high speeds. Adjust the speed in small increments to avoid sudden jumps in speed.

20. The heart rate monitor is not a medical device. Various factors, including the user's movement, may affect the accuracy of heart rate readings. The heart rate monitor is intended only as an exercise aid in determining heart rate trends in general.

21. Never leave the treadmill unattended while it is running. Always remove the key, press the power switch into the off position (see the drawing on page 7 for the location of the power switch), and unplug the power cord when the treadmill is not in use.

22. Do not attempt to move the treadmill until it is properly assembled. (See ASSEMBLY on page 9 and HOW TO FOLD AND MOVE THE TREADMILL on page 27.) You must be able to safely lift 45 lbs. (20 kg) to move the treadmill.

23. When folding or moving the treadmill, make sure that the storage latch is holding the frame securely in the storage position.

24. Do not change the incline of the treadmill by placing objects under the treadmill.

25. Never insert any object into any opening on the treadmill.

26. Inspect and properly tighten all parts of the treadmill regularly.

27. **DANGER:** Always unplug the power cord immediately after use, before cleaning the treadmill, and before performing the maintenance and adjustment procedures described in this manual. Never remove the motor hood unless instructed to do so by an authorized service representative. Servicing other than the procedures in this manual should be performed by an authorized service representative only.

28. Over exercising may result in serious injury or death. If you feel faint or if you experience pain while exercising, stop immediately and cool down.

SAVE THESE INSTRUCTIONS

MAKE YOUR FITNESS GOALS A REALITY

iFIT®

Congratulations on the purchase of your new iFit® compatible fitness equipment. You're just one click away from making your fitness goals a reality.

GO TO IFIT.COM TO GET STARTED

DO MORE THAN JUST WORK OUT

iFit® is the most powerful training tool available to help you accomplish all of your fitness goals. From weight loss and performance to personalized training programs, iFit® is the key to getting more out of everything you do. Some features require paid subscription.

LOSE WEIGHT
Stay on track and motivated with progressive weight loss programs with our trainers, including Jillian Michaels.

COMPETE WITH OTHERS
Push yourself to new limits with real-time virtual races.

PERSONALIZED EVENT TRAINING
5k, 10k, half or full marathon training will help you prepare for your event.

GO MOBILE
Track your workout anywhere you go with iFit® mobile apps.

MAP YOUR ROUTE
With Google Maps™, your fitness equipment will simulate the earth's terrain while displaying Street View during your workout.

SHARE YOUR PROGRESS
Inspire others, motivate yourself and share routes, workouts and more.

GO TO

IFIT.COM

OR CALL

877-236-1009

PROTECT

YOUR FITNESS EQUIPMENT WITH AN EXTENDED SERVICE PLAN

Your new fitness equipment is not an ordinary purchase; it is an investment in your health and well being for years to come.

As the leading provider of manufacturer's extended service plans, ICON strives to protect your equipment and your future.

Please review the following service plans and find one that best fits your needs.

PREVENTIVE MAINTENANCE SERVICE PLANS

Equipment Price	3-Year Plan	5-Year Plan
$0.00 to $1000.00	$199.99	$289.99
$1001.00 to $1500.00	$259.99	$379.99
$1501.00 to $2500.00	$339.99	$489.99
(Bikes/Systems Only) $0.00 to $2500.00	$139.99	NA

Features:

- Includes an annual preventive maintenance and performance check at your convenience
- Unlimited in-home repairs; no shipping required
- Covers parts and labor on all manufacturer's defects, as well as wear and tear on parts
- Up to 5 years of coverage available

STANDARD SERVICE PLANS

Equipment Price	1-Year Plan	2-Year Plan	3-Year Plan
$0.00 to $300.00	$29.99	$39.99	$59.99
$301.00 to $1000.00	$89.99	$119.99	$149.99
$1001.00 to $2000.00	$109.99	$139.99	$179.99
$2001.00 to $3000.00	$179.99	$209.99	$239.99

Features:

- Unlimited in-home repairs; no shipping required
- Covers parts and labor on all manufacturer's defects, as well as wear and tear on parts
- Up to 3 years of coverage available

To protect your fitness equipment today, please call Customer Care at 1-800-677-3838.
Or, visit us online at www.utserv.com.

UTS
UNIVERSAL TECHNICAL SERVICES

BEFORE YOU BEGIN

Thank you for selecting the revolutionary PROFORM® ZT10 treadmill. The ZT10 treadmill offers an impressive selection of features designed to make your workouts at home more effective and enjoyable. And when you're not exercising, the unique treadmill can be folded up, requiring less than half the floor space of other treadmills.

For your benefit, read this manual carefully before using the treadmill. If you have questions after reading this manual, please see the front cover of this manual. To help us assist you, please note the product model number and serial number before contacting us. The model number and the location of the serial number decal are shown on the front cover of this manual.

Before reading further, please review the drawing below and familiarize yourself with the labeled parts.

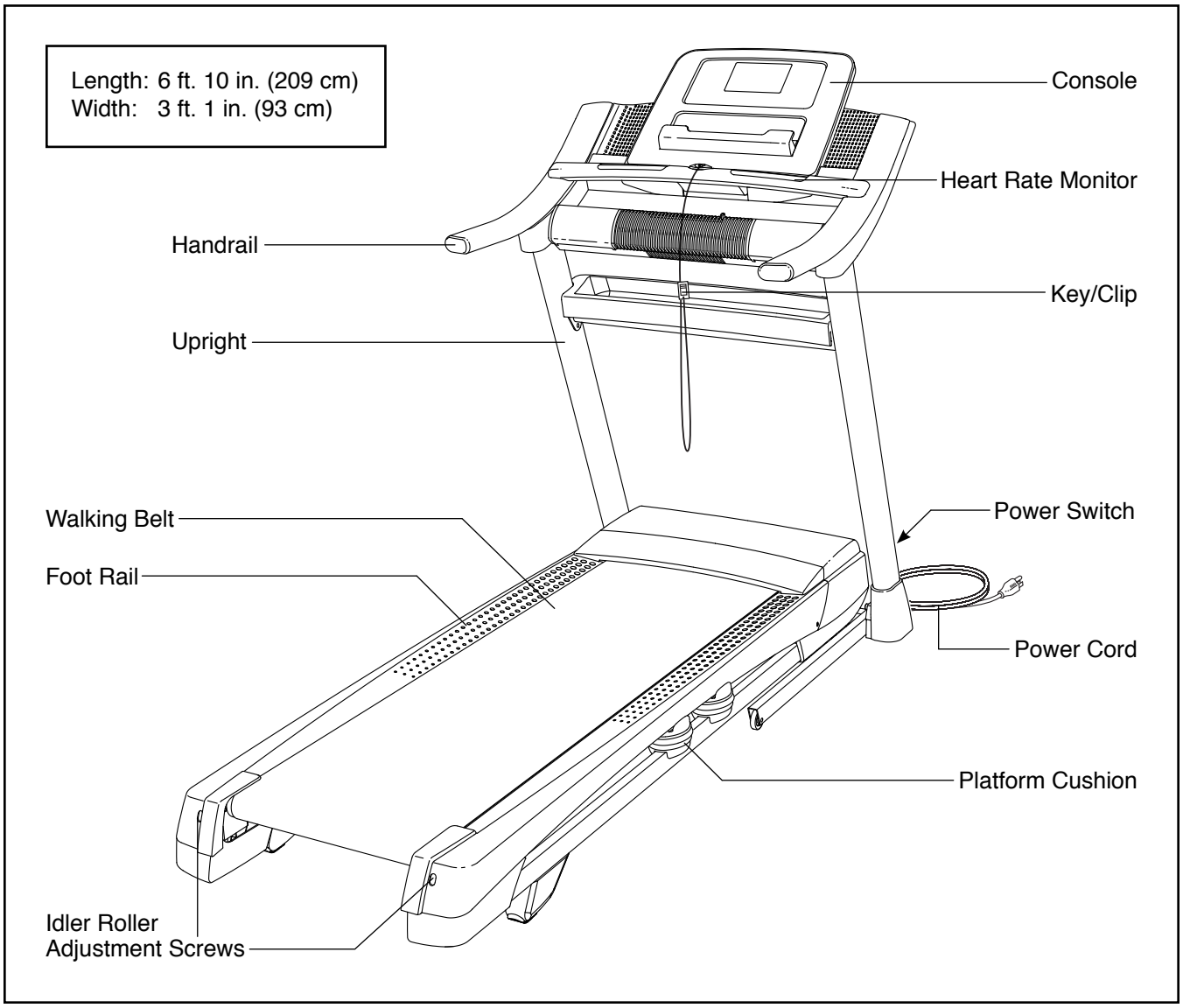

PART IDENTIFICATION CHART

Use the drawings below to identify small parts used for assembly. The number in parentheses below each drawing is the key number of the part, from the PART LIST near the end of this manual. The number following the key number is the quantity used for assembly. **Note: If a part is not in the hardware kit, check to see whether it is preattached. Extra parts may be included.**

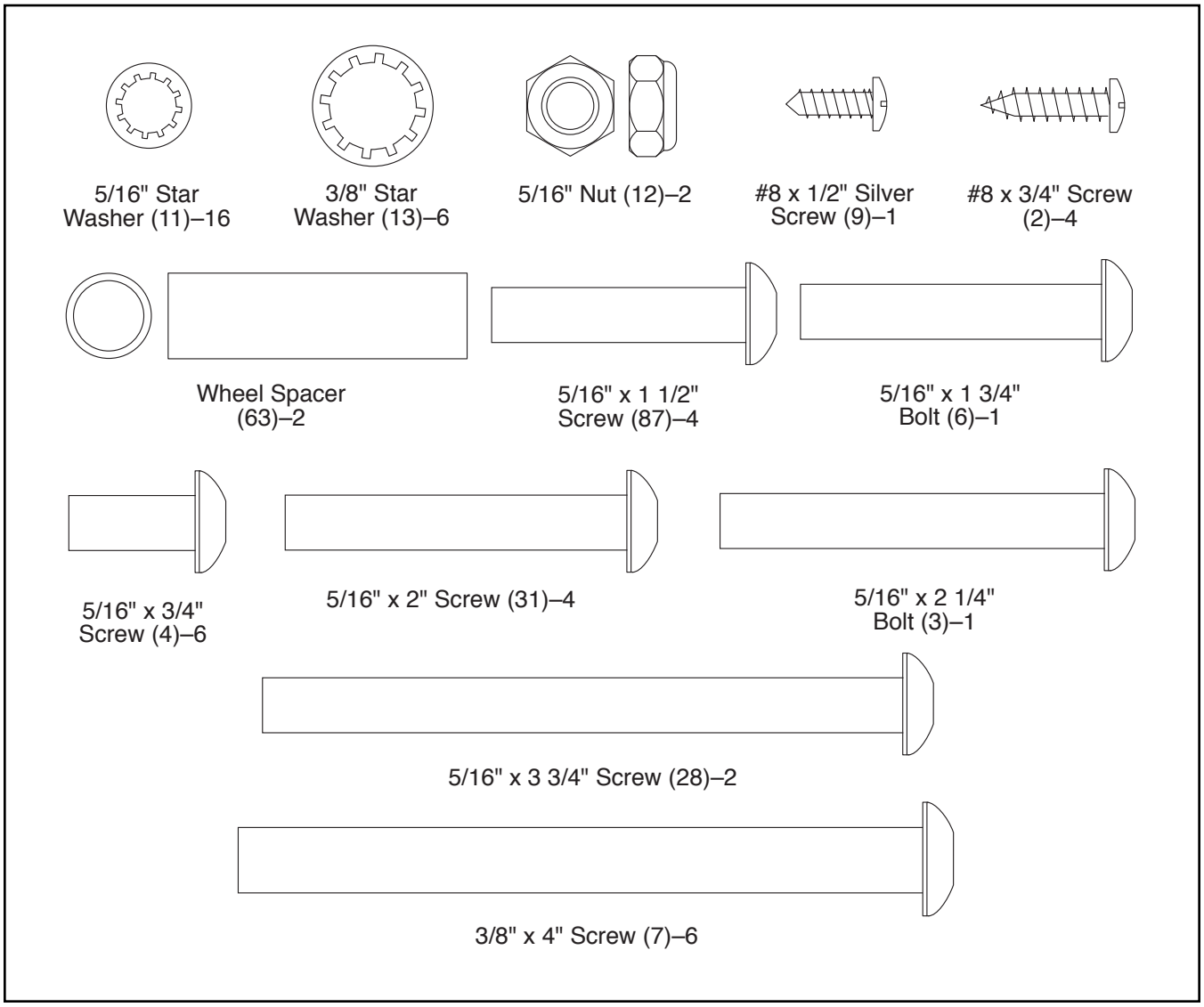

ASSEMBLY

- Assembly requires two persons.
- Place all parts in a cleared area and remove the packing materials. Do not dispose of the packing materials until you finish all assembly steps.
- After shipping, there may be an oily substance on the exterior of the treadmill. This is normal. If there is an oily substance on the treadmill, wipe it off with a soft cloth and a mild, non-abrasive cleaner.
- Left parts are marked “L” or “Left” and right parts are marked “R” or “Right.”
- To identify small parts, see page 8.
- Assembly requires the following tools:

  the included hex key

  one adjustable wrench

  one Phillips screwdriver

  To avoid damaging parts, do not use power tools.

1. **Go to www.proformservice.com/registration on your computer and register your product.**
   - activates your warranty
   - saves you time if you ever need to contact Customer Care
   - allows us to notify you of upgrades and offers

   Note: If you do not have Internet access, call Customer Care (see the front cover of this manual) and register your product.

1

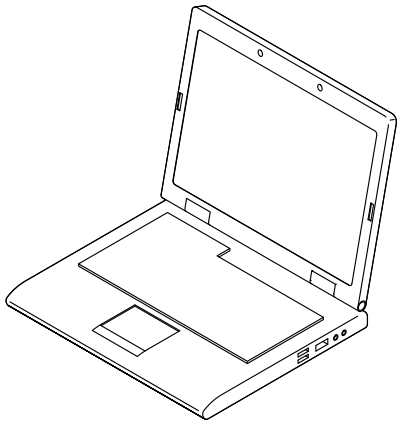

2. **Make sure that the power cord is unplugged.**

   Press the two Base Caps (74) into the Base (94) if they are not already in the Base.

   Remove the tie securing the Upright Wire (81) to the front of the Base (94).

   Identify the Right Upright (90). Remove and discard the indicated screw (A). Have a second person hold the Right Upright near the Base (94).

   See the inset drawing. Tie the wire tie in the Right Upright (90) securely around the end of the Upright Wire (81). Then, insert the Upright Wire into the lower end of the Right Upright as you pull the other end of the wire tie out of the Right Upright.

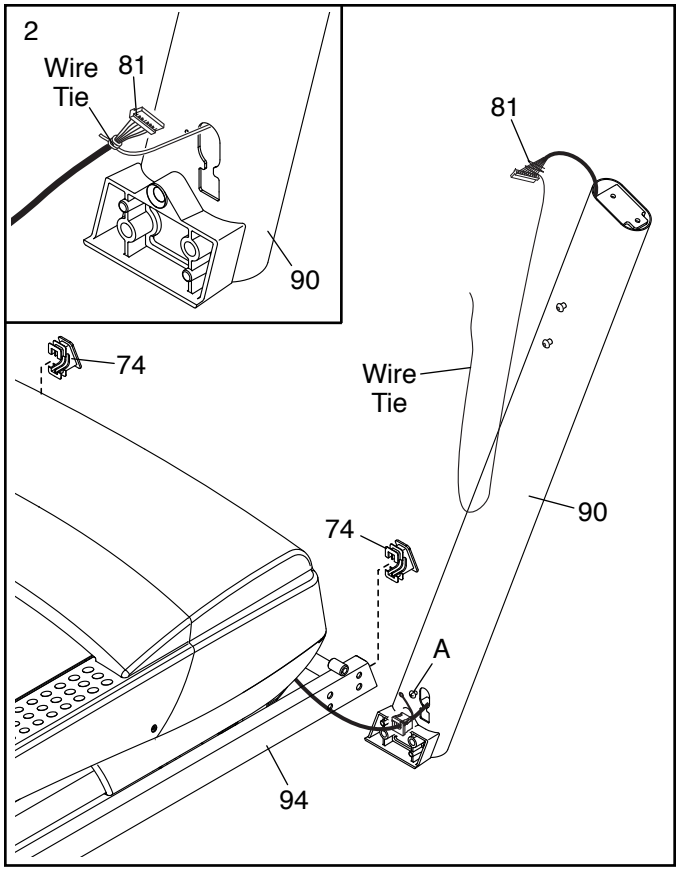

3. Lay the Right Upright (90) near the Base (94). Press the Grommet (77) into the square hole in the Right Upright. **Make sure not to pinch the ground wire.**

   Then, attach the ground wire to the Right Upright (90) with a #8 x 1/2" Silver Screw (9) as shown.

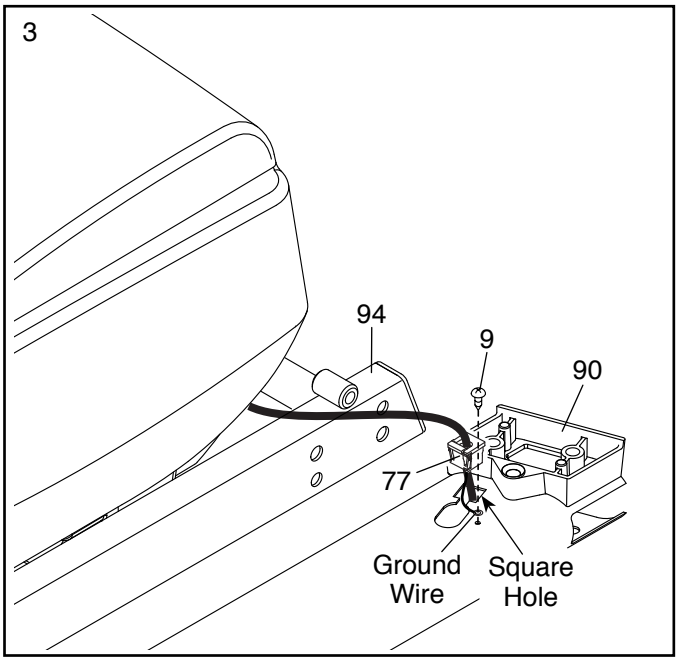

4. Insert a Wheel Spacer (63) into a Front Wheel (62). Hold the Front Wheel inside the bottom of the Right Upright (90), and insert a 3/8" x 4" Screw (7) with a 3/8" Star Washer (13) into the Right Upright and the Front Wheel.

   Repeat this step with the Left Upright (not shown).

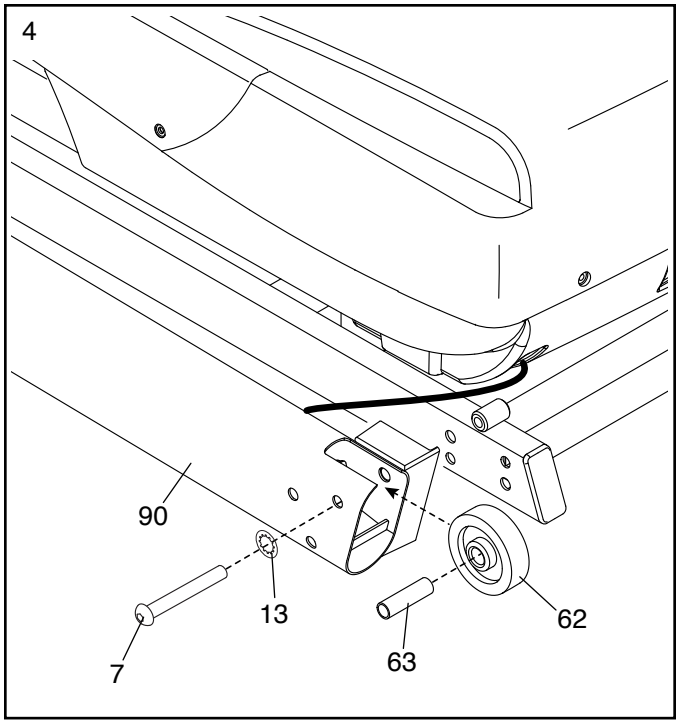

5. Place a piece of packing material (B) under the right side of the Base (94). Hold the Right Upright (90) against the Base. **Make sure not to pinch the Upright Wire (81).**

   Insert two 3/8" x 4" Screws (7) with two 3/8" Star Washers (13) into the Right Upright (90), and partially tighten the three Screws into the Base (94); **do not fully tighten the Screws yet.**

   Move the packing material (B) to the left side of the Base (94) and attach the Left Upright (not shown) in the same way. Note: There are no wires on the left side.

   Remove the packing material (B) from underneath the Base (94).

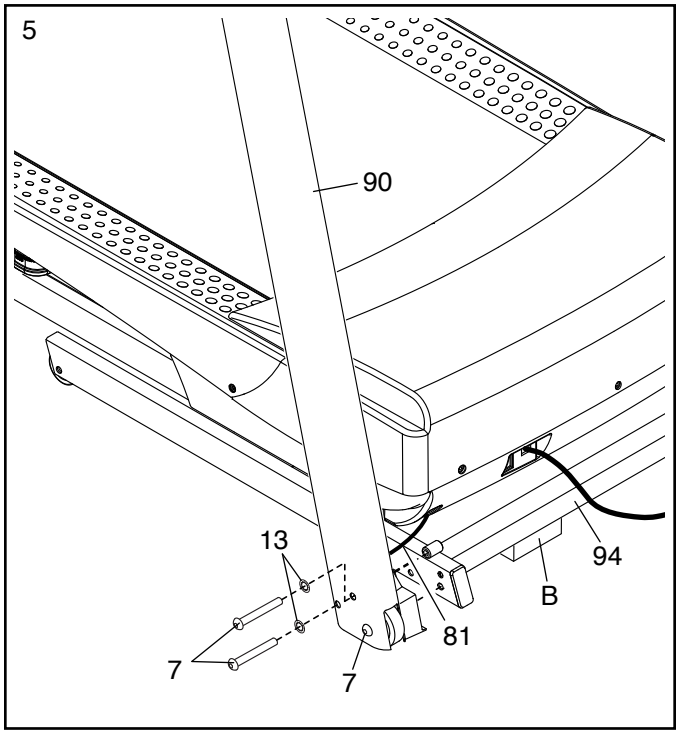

6. Remove and save the four indicated 5/16" x 3/4" Screws (4); **the Screws will be used in a later step.**

   Identify the Left and Right Base Covers (82, 83). Slide the Left Base Cover onto the Left Upright (89), and slide the Right Base Cover onto the Right Upright (90). **Do not press the Base Covers into place yet.**

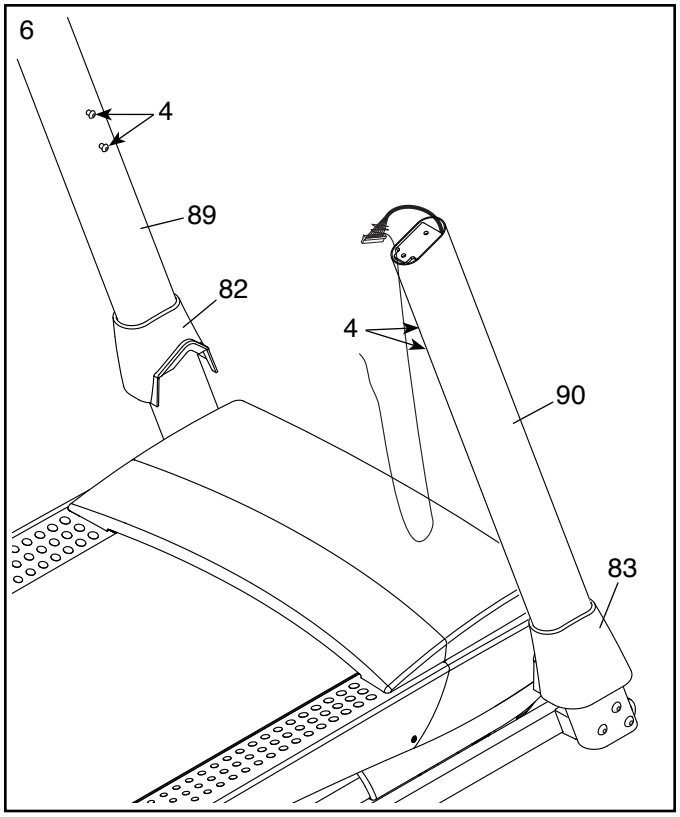

7. With the help of a second person, hold the console assembly near the Right Upright (90).

   See the inset drawing. Connect the Upright Wire (81) to the console wire. **The connectors should slide together easily and snap into place.** If they do not, turn one connector and try again. **IF YOU DO NOT CONNECT THE CONNECTORS PROPERLY, THE CONSOLE MAY BECOME DAMAGED WHEN YOU TURN ON THE POWER.** Then, remove the wire tie from the Upright Wire.

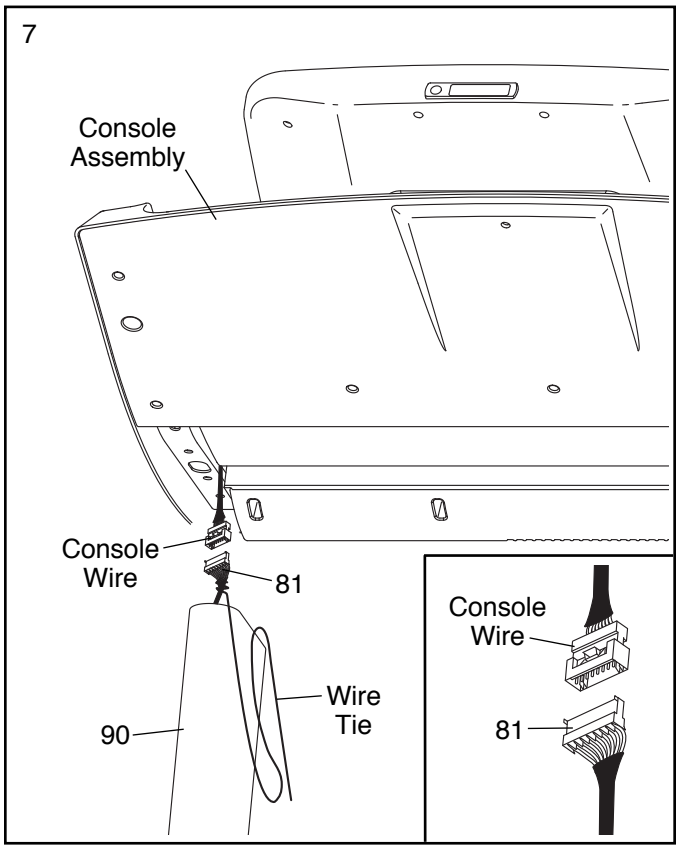

8. Insert the wires into the Right Upright (90) as you set the console assembly on the Left and Right Uprights (89, 90). **Be careful not to pinch the Upright Wire (81).**

   Attach the console assembly with four 5/16" x 1 1/2" Screws (87) and four 5/16" Star Washers (11). **Start all four Screws, and then tighten them.**

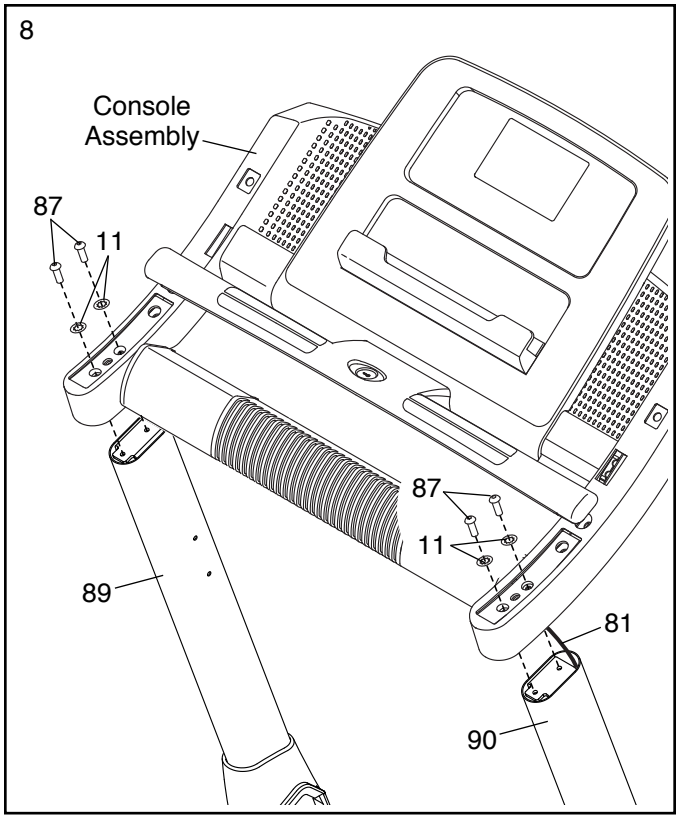

9. Identify the Left Handrail (86). Slide the Left Handrail between the console assembly and the pulse assembly.

   Attach the Left Handrail (86) with two 5/16" x 2" Screws (31), a 5/16" x 3 3/4" Screw (28), and three 5/16" Star Washers (11) as shown. **Start all three Screws, and then tighten them.**

   Attach the Right Handrail (not shown) to the console assembly in the same way.

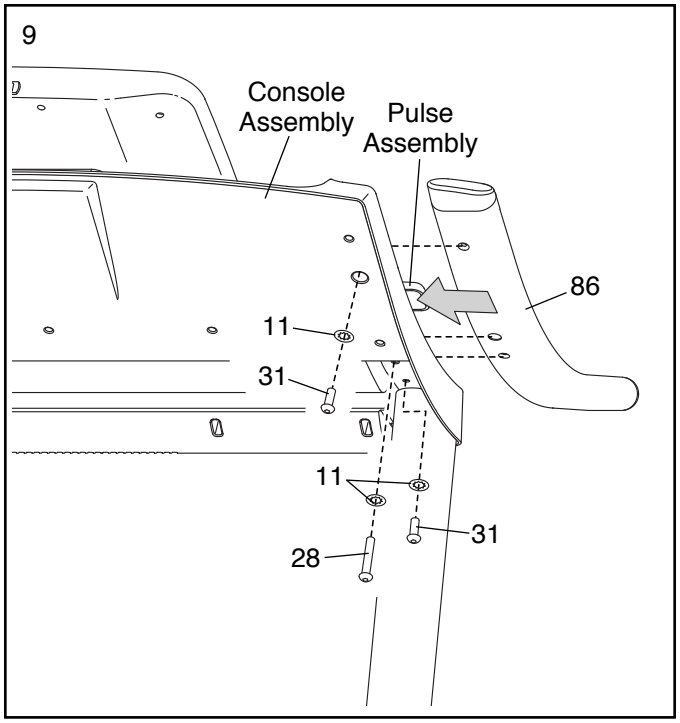

10. Carefully slide the Upright Crossbar (41) between the Uprights (89, 90). Attach the Upright Crossbar with the four 5/16" x 3/4" Screws (4) that you removed in step 6 and four 5/16" Star Washers (11). **Start all four Screws, and then tighten them.**

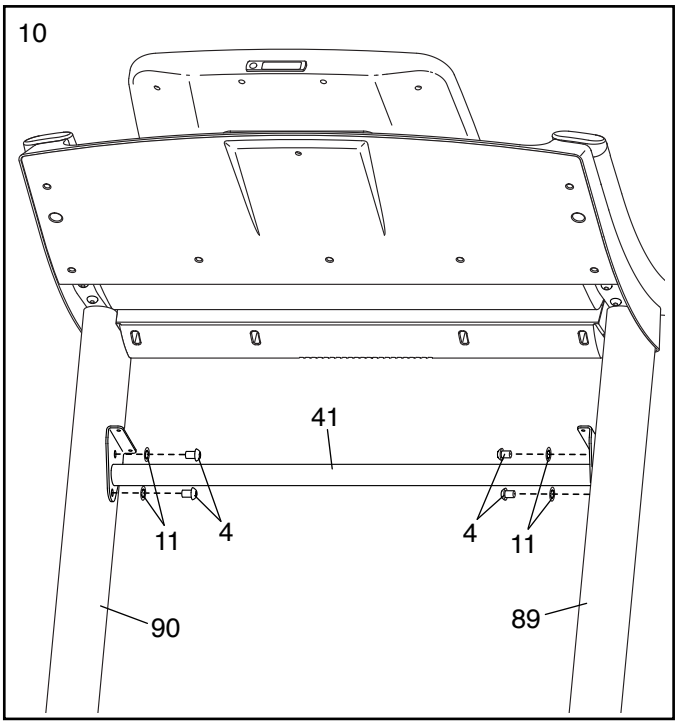

11. Attach the Tray (112) to the Upright Crossbar (41) with four #8 x 3/4" Screws (2). **Start all four Screws, and then tighten them.**

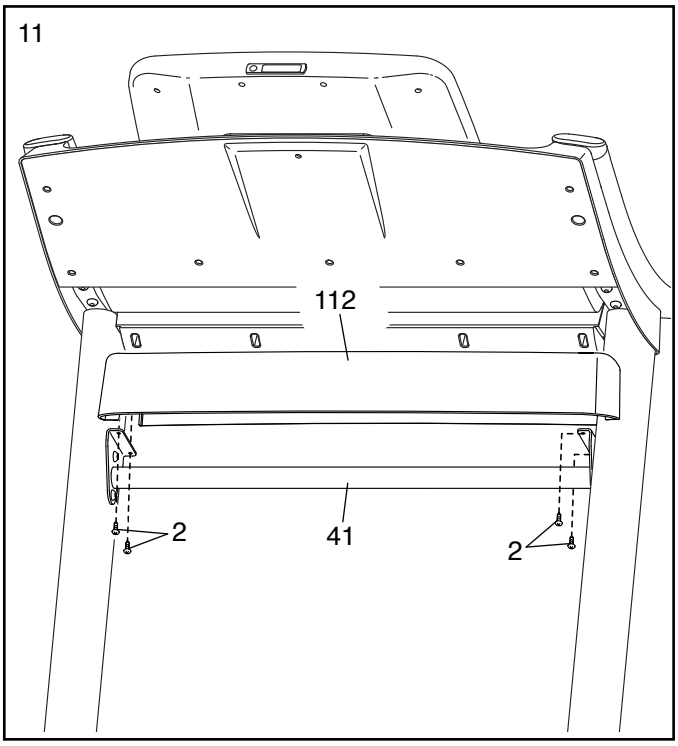

12. Tighten the six 3/8" x 4" Screws (7). Then, press the Base Covers (82, 83) into place.

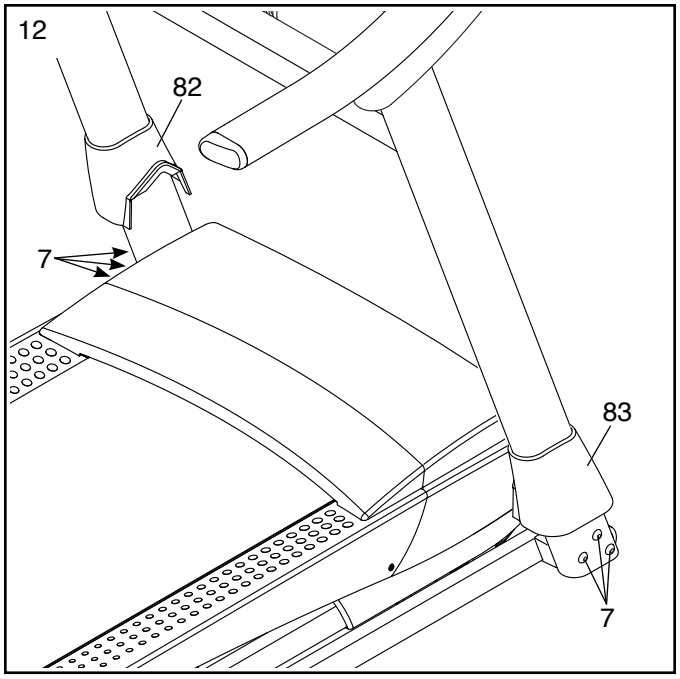

13. **Note: If assembled on a smooth surface, the treadmill may roll forward during this step.**

Raise the Frame (56) to the upright position. **Have a second person hold the Frame until step 15 is completed.**

Remove the two 5/16" x 3/4" Screws (4) from the Latch Crossbar (38).

Orient the Latch Crossbar (38) as shown. **Make sure that the "This side toward belt" sticker (C) is facing the treadmill.** Attach the Latch Crossbar to the brackets on the Frame (56) with the two 5/16" x 3/4" Screws (4) that you just removed and two 5/16" Star Washers (11).

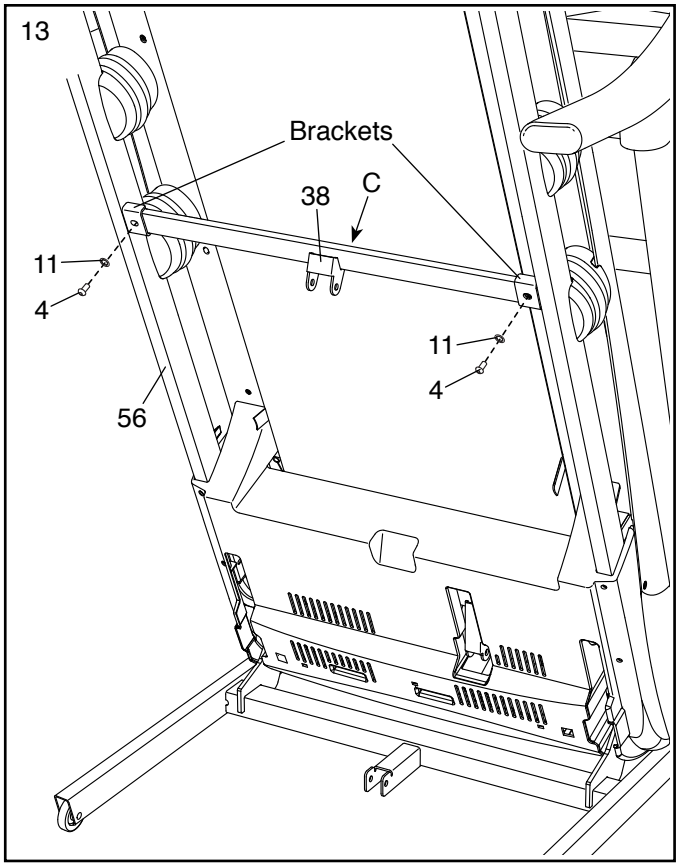

14. Orient the Storage Latch (53) so that the decal is facing away from the treadmill as shown.

    Attach the lower end of the Storage Latch (53) to the bracket on the Base (94) with a 5/16" x 1 3/4" Bolt (6) and a 5/16" Nut (12).

    Raise the Storage Latch (53) to a vertical position. Then, remove and discard the tie (D).

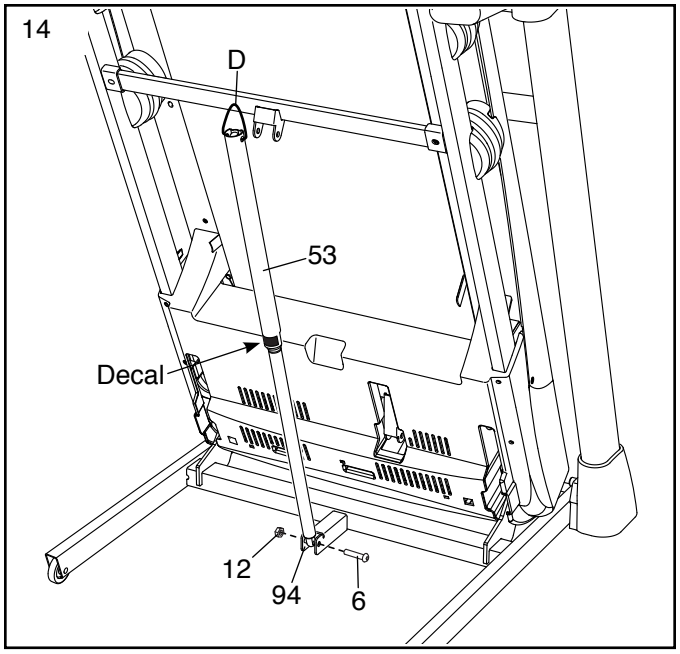

15. Align the upper end of the Storage Latch (53) with the bracket on the Latch Crossbar (38). Insert a 5/16" x 2 1/4" Bolt (3) through the bracket. This should push a spacer (E) out of the other end. Discard the spacer.

    Attach the Storage Latch (53) with the 5/16" x 2 1/4" Bolt (3) and a 5/16" Nut (12).

    Lower the Frame (56) (see HOW TO LOWER THE TREADMILL FOR USE on page 27).

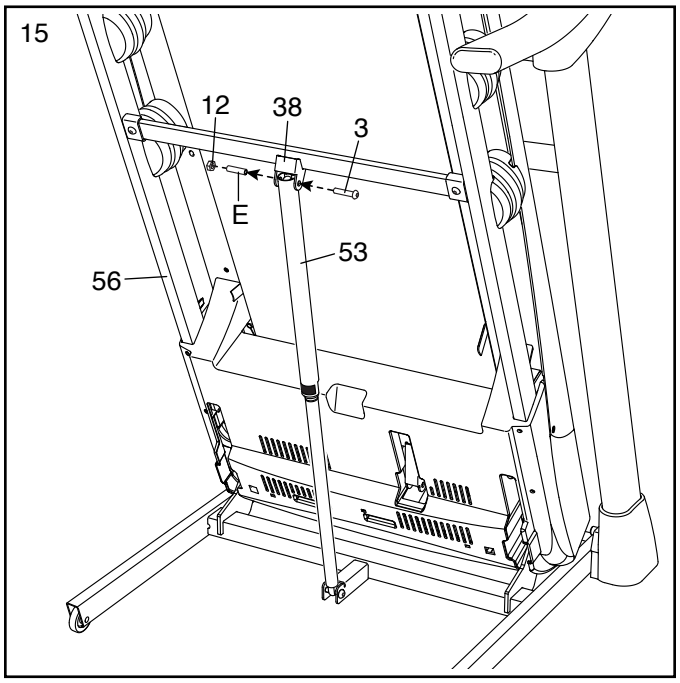

16. **Make sure that all parts are properly tightened before you use the treadmill.** If there are sheets of plastic on the treadmill decals, remove the plastic. To protect the floor or carpet, place a mat under the treadmill. To avoid damage to the console, keep the treadmill out of direct sunlight. Note: Extra parts may be included. Keep the included hex keys in a secure place; one of the hex keys is used to adjust the walking belt (see pages 29 and 30).

THE CHEST HEART RATE MONITOR

HOW TO PUT ON THE HEART RATE MONITOR

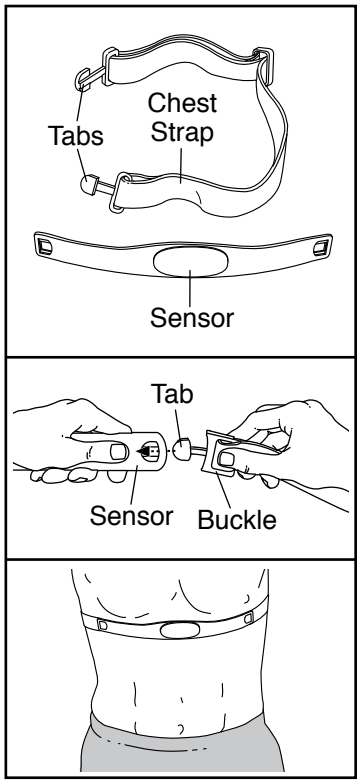

The heart rate monitor consists of a chest strap and a sensor. Insert the tab on one end of the chest strap into the hole in one end of the sensor as shown. Then, press the end of the sensor under the buckle on the chest strap. The tab should be flush with the front of the sensor.

The heart rate monitor must be worn under your clothes, tight against your skin. Wrap the heart rate monitor around your chest in the location shown. Make sure that the logo is right-side-up. Then, attach the other end of the chest strap to the sensor. Adjust the length of the chest strap, if necessary.

Pull the sensor away from your body a few inches and locate the two electrode areas, which are covered by shallow ridges. Using saline solution such as saliva or contact lens solution, wet the electrode areas. Then, return the sensor to a position against your chest.

CARE AND MAINTENANCE

- Thoroughly dry the sensor with a soft towel after each use. Moisture may keep the sensor activated, shortening the life of the battery.
- Store the heart rate monitor in a warm, dry place. Do not store the heart rate monitor in a plastic bag or other container that may trap moisture.
- Do not expose the heart rate monitor to direct sunlight for extended periods of time; do not expose it to temperatures above 122° F (50° C) or below 14° F (-10° C).
- Do not excessively bend or stretch the sensor when using or storing the heart rate monitor.
- To clean the sensor, use a damp cloth and a small amount of mild soap. Then, wipe the sensor with a damp cloth and thoroughly dry it with a soft towel. Never use alcohol, abrasives, or chemicals to clean the sensor. Hand wash and air dry the chest strap.

TROUBLESHOOTING

If the heart rate monitor does not function properly, try the steps below.

- Make sure that you are wearing the heart rate monitor as described at the left. If the heart rate monitor does not function when positioned as described, move it slightly lower or higher on your chest.
- If heart rate readings are not displayed until you begin perspiring, rewet the electrode areas.
- For the console to display heart rate readings, you must be within arm's length of the console.
- If there is a battery cover on the back of the sensor, replace the battery with a new battery of the same type.
- The heart rate monitor is designed to work with people who have normal heart rhythms. Heart rate reading problems may be caused by medical conditions such as premature ventricular contractions (pvcs), tachycardia bursts, and arrhythmia.
- The operation of the heart rate monitor can be affected by magnetic interference from high power lines or other sources. If you suspect that magnetic interference is causing a problem, try relocating the fitness equipment.

HOW TO CONNECT THE POWER CORD

Use a Surge Suppressor

Your treadmill, like other electronic equipment, can be damaged by sudden voltage changes in your home's power. Voltage surges, spikes, and noise interference can result from weather conditions or from other appliances being turned on or off. **To decrease the risk of damaging the treadmill, always use a surge suppressor with the treadmill. To purchase a surge suppressor, see precaution 13 on page 3.**

Use only a surge suppressor that is UL 1449 listed as a transient voltage surge suppressor (TVSS). The surge suppressor must have a UL suppressed voltage rating of 400 volts or less and a minimum surge dissipation of 450 joules. The surge suppressor must also be electrically rated for 120 volts AC and 15 amps. There must be a monitoring light on the surge suppressor to indicate whether it is functioning properly. **Failure to use a properly functioning surge suppressor could result in damage to the control system of the treadmill and serious injury to users.**

Plug in the Power Cord

The treadmill must be grounded. If it should malfunction or break down, grounding provides a path of least resistance for electric current to reduce the risk of electric shock. The treadmill power cord has a plug with a grounding pin (see drawing 1 on this page).

⚠ DANGER: Improper connection of the power cord increases the risk of electric shock. Do not modify the plug—if it will not fit an outlet, have a proper outlet installed by a qualified electrician. If you are unsure whether the treadmill is properly grounded, contact a qualified electrician.

Plug the power cord into a surge suppressor, and plug the surge suppressor into an appropriate outlet that is properly installed and grounded in accordance with all local codes and ordinances. **The outlet must be on a nominal 120-volt circuit capable of carrying 15 or more amps. To avoid overloading the circuit, do not plug other electrical devices, except for low-power devices such as cell phone chargers, into the surge suppressor or into an outlet on the same circuit. IMPORTANT: The treadmill is not compatible with GFCI-equipped outlets and may not be compatible with AFCI-equipped outlets.**

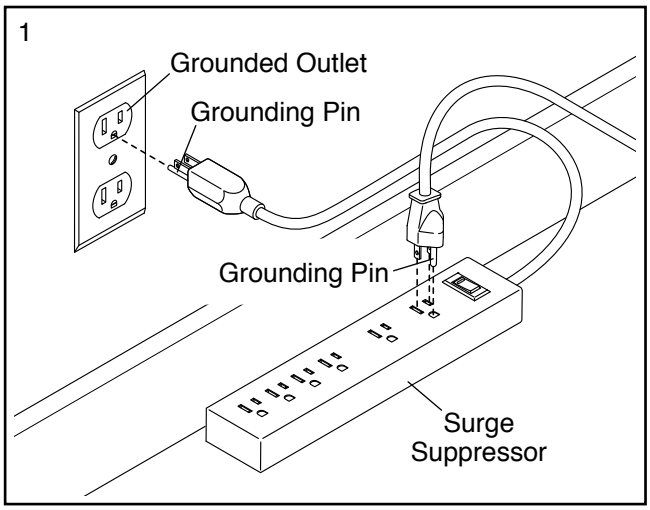

A temporary adapter may be used to connect the surge suppressor to a 2-pole receptacle if a properly grounded outlet is not available.

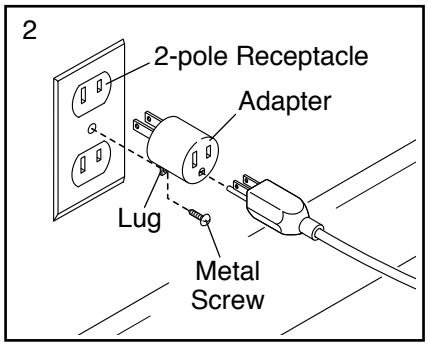

The lug or wire extending from the adapter must be connected with a metal screw to a permanent ground such as a properly grounded outlet box cover. **Some 2-pole receptacle outlet box covers are not grounded. Before using an adapter, contact a qualified electrician to determine whether the outlet box cover is grounded. The temporary adapter should be used only until a properly grounded outlet can be installed by a qualified electrician.**

CONSOLE DIAGRAM

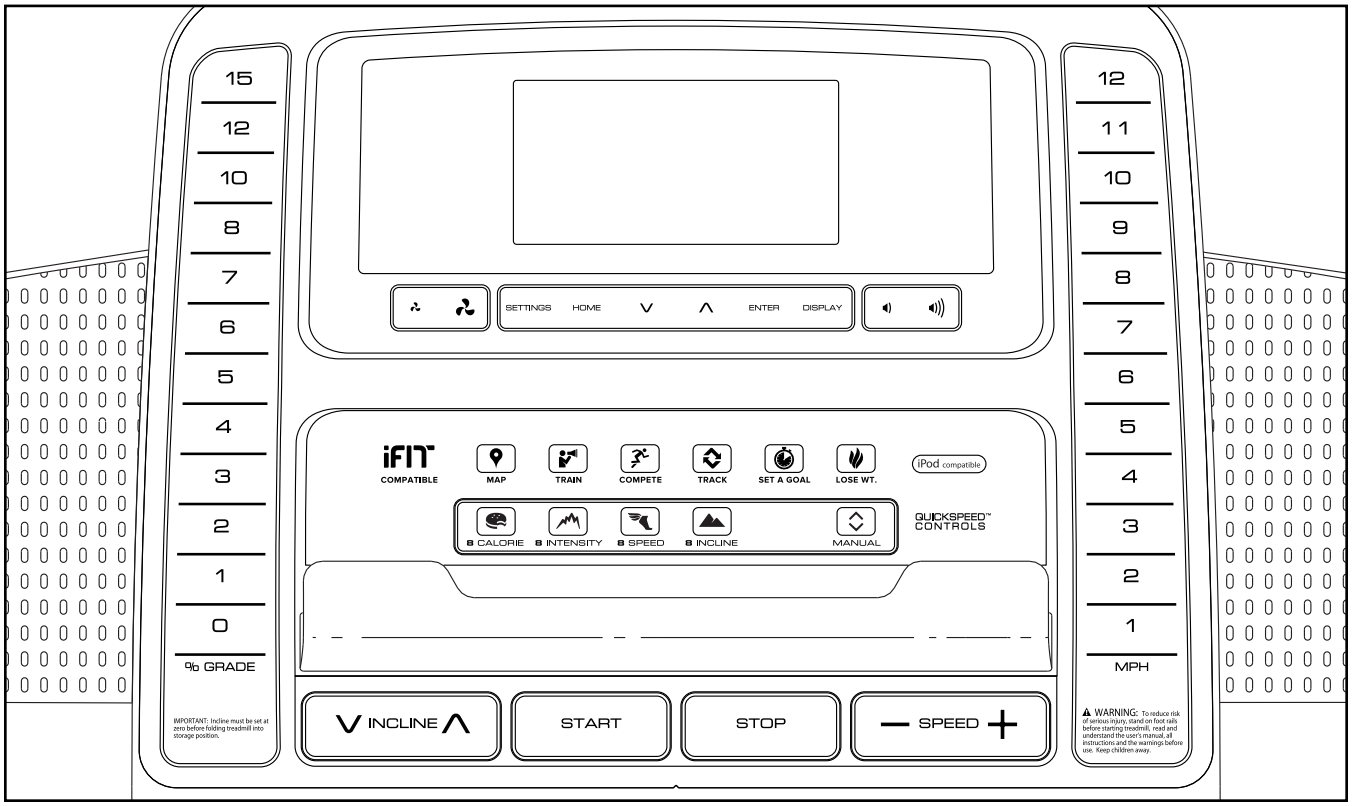

FEATURES OF THE CONSOLE

The treadmill console offers an impressive array of features designed to make your workouts more effective and enjoyable. When you use the manual mode, you can change the speed and incline of the treadmill with the touch of a button. As you exercise, the console will display instant exercise feedback. You can even measure your heart rate using the handgrip heart rate monitor or the chest heart rate monitor.

In addition, the console features a selection of onboard workouts. Each workout automatically controls the speed and incline of the treadmill as it guides you through an effective exercise session.

The console also features a revolutionary iFit mode that enables the treadmill to communicate with your wireless network through an optional iFit module. With the iFit mode, you can download personalized workouts, create your own workouts, track your workout results, race against other iFit users, and access many other features. **To purchase an iFit module at any time, go to www.iFit.com or call the telephone number on the front cover of this manual.**

You can even listen to your favorite workout music or audio books with the console's sound system while you exercise.

To turn on the power, see page 20. **To use the manual mode,** see page 20. **To use an onboard workout,** see page 23. **To use a set-a-goal workout,** see page 24. **To use an iFit workout,** see page 24. **To use the sound system,** see page 25. **To use the settings mode,** see page 26.

Note: The console can display speed and distance in either miles or kilometers. To find which unit of measurement is selected, see THE SETTINGS MODE on page 26. For simplicity, all instructions in this manual refer to miles.

IMPORTANT: If there are sheets of plastic on the console, remove the plastic. To prevent damage to the walking platform, wear clean athletic shoes while using the treadmill. The first time you use the treadmill, observe the alignment of the walking belt, and center the walking belt if necessary (see page 30).

HOW TO TURN ON THE POWER

IMPORTANT: If the treadmill has been exposed to cold temperatures, allow it to warm to room temperature before you turn on the power. If you do not do this, you may damage the console displays or other electrical components.

Plug in the power cord (see page 18). Next, locate the power switch on the treadmill frame near the power cord. Press the power switch into the reset position.

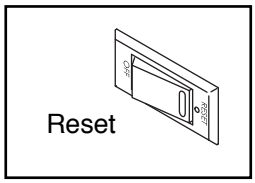

IMPORTANT: The console features a display demo mode, designed to be used if the treadmill is displayed in a store. If the displays light as soon as you plug in the power cord and press the power switch into the reset position, the demo mode is turned on. To turn off the demo mode, hold down the Stop button for a few seconds. If the displays remain lit, see THE SETTINGS MODE on page 26 to turn off the demo mode.

Next, stand on the foot rails of the treadmill. Find the clip attached to the key and slide the clip onto the waistband of your clothes. Then, insert the key into the console.

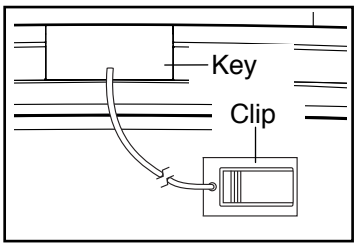

After a moment, the displays will light.
IMPORTANT: In an emergency, the key can be pulled from the console, causing the walking belt to slow to a stop. Test the clip by carefully taking a few steps backward; if the key is not pulled from the console, adjust the position of the clip.

HOW TO USE THE MANUAL MODE

1. **Insert the key into the console.**

   See HOW TO TURN ON THE POWER at the left.

2. **Select the manual mode.**

   Press the Manual button on the console. If you are not connected to iFit, the manual mode will be selected automatically.

3. **Start the walking belt.**

   To start the walking belt, press the Start button, the Speed increase button, or one of the numbered speed buttons.

   If you press the Start button or the Speed increase button, the walking belt will begin to move at 1 mph. As you exercise, change the speed of the walking belt as desired by pressing the Speed increase and decrease buttons. Each time you press one of the buttons, the speed setting will change by 0.1 mph; if you hold down the button, the speed setting will change in increments of 0.5 mph. Note: After you press the button, it may take a moment for the walking belt to reach the selected speed setting.

   If you press one of the numbered speed buttons, the walking belt will gradually change speed until it reaches the selected speed setting. To select a speed setting that includes a decimal—such as 3.5 mph—press two numbered buttons in succession. For example, to select a speed setting of 3.5 mph, press the 3 button and then immediately press the 5 button. Note: This will not function if the console is set to metric units.

   To stop the walking belt, press the Stop button. The time will begin to flash in the display. To restart the walking belt, press the Start button or the Speed increase button.

4. **Change the incline of the treadmill as desired.**

   To change the incline of the treadmill, press the Incline increase or decrease button or one of the numbered incline buttons. Each time you press one of the buttons, the treadmill will gradually adjust to the selected incline setting.

5. **Follow your progress with the displays.**

   As you walk or run on the treadmill, the display can show the following workout information:

   - The elapsed time
   - The distance that you have walked or run
   - The workout intensity bar
   - The approximate number of calories you have burned
   - The incline level of the treadmill
   - The number of vertical feet you have climbed
   - The speed of the walking belt
   - Your heart rate (see step 6 on page 22)
   - The matrix

   The matrix offers several display tabs. Press the Display button until the desired tab is shown.

   The Incline tab will show a profile of the incline settings of the workout. A new segment will appear at the end of each minute. The Speed tab will show a profile of the speed settings of the workout.

   The My Trail tab will show a track that represents 1/4 mile (400 m). As you exercise, the flashing rectangle will show your progress. The My Trail tab will also show the number of laps you complete.

   The Calorie tab will show the approximate amount of calories you have burned. The height of each segment represents the amount of calories burned during that segment.

   As you exercise, the workout intensity level bar will indicate the approximate intensity level of your exercise.

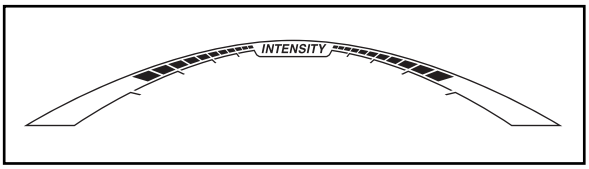

   Press the Home button to return to the default menu (see THE SETTINGS MODE on page 26 to set the default menu). If necessary, press the Home button again.

   When a wireless iFit module is connected, the wireless symbol at the top of the display will show the strength of your wireless signal. Four arcs indicate full signal strength.

   To reset the displays, press the Stop button, remove the key, and then reinsert the key.

6. **Measure your heart rate if desired.**

Note: If you use the handgrip heart rate monitor and the chest heart rate monitor at the same time, the console will not display your heart rate accurately. For information about the chest heart rate monitor, see page 17.

Before using the handgrip heart rate monitor, remove the sheets of plastic from the metal contacts. In addition, make sure that your hands are clean.

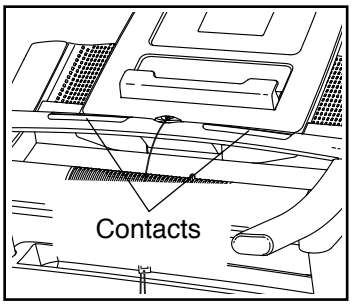

To measure your heart rate, **stand on the foot rails** and hold the contacts with your palms for approximately ten seconds; **avoid moving your hands.** When your pulse is detected, your heart rate will be shown. **For the most accurate heart rate reading, continue to hold the contacts for about 15 seconds.**

7. **Turn on the fan if desired.**

The fan features multiple speed settings and an auto mode. When the auto mode is selected, the speed of the fan will automatically increase and decrease as the speed of the walking belt increases and decreases.

Press the fan buttons repeatedly to select a fan speed or to turn off the fan.

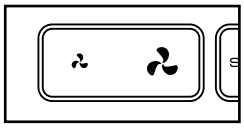

8. **When you are finished exercising, remove the key from the console.**

Step onto the foot rails, press the Stop button, and **adjust the incline of the treadmill to zero. The incline must be at zero or you may damage the treadmill when you fold it to the storage position.** Next, remove the key from the console and put it in a secure place.

When you are finished using the treadmill, press the power switch into the off position and unplug the power cord. **IMPORTANT: If you do not do this, the treadmill's electrical components may wear prematurely.**

HOW TO USE AN ONBOARD WORKOUT

1. **Insert the key into the console.**

   See HOW TO TURN ON THE POWER on page 20.

2. **Select an onboard workout.**

   To select an onboard workout, press the Calorie button, the Intensity button, the Speed button, or the Incline button repeatedly until the desired workout appears in the display.

   When you select an onboard workout, the display will show the duration, the distance, and the name of the workout. After a few seconds, the display will show the maximum speed and incline settings of the workout. In addition, a profile of the speed settings of the workout will appear in the matrix. If you select a calorie workout, the approximate number of calories you will burn will appear in the name of the workout.

3. **Start the workout.**

   Press the Start button or the Speed increase button to start the workout. A moment after you press the button, the treadmill will automatically adjust to the first speed and incline settings of the workout. Hold the handrails and begin walking.

   Each workout is divided into segments. One speed setting and one incline setting are programmed for each segment. Note: The same speed setting and/or incline setting may be programmed for consecutive segments.

   During the workout, the profiles on the speed and incline tabs will show your progress. The flashing segment of the profile represents the current segment of the workout. The height of the flashing segment indicates the speed or incline setting for the current segment.

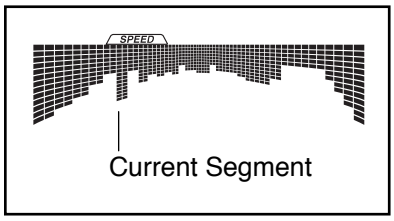

   At the end of each segment, a series of tones will sound and the next segment of the profile will begin to flash. If a different speed and/or incline setting is programmed for the next segment, the speed and/or incline setting will flash in the display and the treadmill will automatically adjust to the new speed and/or incline setting.

   The workout will continue in this way until the last segment of the profile flashes in the display and the last segment ends. The walking belt will then slow to a stop.

   Note: The calorie goal is an estimate of the number of calories that you will burn during the workout. The actual number of calories that you burn will depend on various factors such as your weight. In addition, if you manually change the speed or incline of the treadmill during the workout, the number of calories you burn will be affected.

   If the speed or incline setting is too high or too low at any time during the workout, you can manually override the setting by pressing the Speed or Incline buttons; **however, when the next segment of the workout begins, the treadmill will automatically adjust to the speed and incline settings for the next segment.**

   To stop the workout at any time, press the Stop button. The time will begin to flash in the display. To resume the workout, press the Start button or the Speed increase button. The walking belt will begin to move at 1 mph. When the next segment of the workout begins, the treadmill will automatically adjust to the speed and incline settings for the next segment.

4. **Follow your progress with the displays.**

   See step 5 on page 21. The display will show the time remaining instead of the elapsed time.

5. **Measure your heart rate if desired.**

   See step 6 on page 22.

6. **Turn on the fan if desired.**

   See step 7 on page 22.

7. **When you are finished exercising, remove the key from the console.**

   See step 8 on page 22.

HOW TO USE A SET-A-GOAL WORKOUT

1. **Insert the key into the console.**

   See HOW TO TURN ON THE POWER on page 20.

2. **Set a calories, distance, or time goal.**

   Press the Set A Goal button repeatedly until the name of the desired goal appears in the display.

   Then, press the increase and decrease buttons next to the Enter button to set the desired goal.

3. **Start the workout.**

   Press the Start button to start the workout. A moment after you press the button, the walking belt will begin to move. Hold the handrails and begin walking.

   The workout will function in the same way as the manual mode (see page 20).

   The workout will continue until you reach the goal that you set. The walking belt will then slow to a stop.

   Note: The calorie goal is an estimate of the number of calories that you will burn during the workout. The actual number of calories that you burn will depend on various factors such as your weight.

4. **Follow your progress with the displays.**

   See step 5 on page 21.

5. **Measure your heart rate if desired.**

   See step 6 on page 22.

6. **Turn on the fan if desired.**

   See step 7 on page 22.

7. **When you are finished exercising, remove the key from the console.**

   See step 8 on page 22.

HOW TO USE AN IFIT WORKOUT

Note: To use an iFit workout, you must have an optional iFit module. **To purchase an iFit module at any time, go to www.iFit.com or call the telephone number on the front cover of this manual.** You must also have access to a computer with a USB port and an internet connection. In addition, you must have access to a wireless network including an 802.11b/g/n router with SSID broadcast enabled (hidden networks are not supported). An iFit.com membership is also required.

1. **Insert the key into the console.**

   See HOW TO TURN ON THE POWER on page 20.

2. **Insert the iFit module into the console.**

   To insert the iFit module, see the instructions included with the iFit module.

   IMPORTANT: To satisfy exposure compliance requirements, the antenna and transmitter in the iFit module must be at least 8 in. (20 cm) from all persons and must not be near or connected to any other antenna or transmitter.

3. **Select a user.**

   If more than one user is registered, you can switch users in the iFit main screen. Press the increase and decrease buttons next to the Enter button to select a user.

4. **Select an iFit workout.**

   To download an iFit workout in your schedule, press the Map, Train, or Lose Wt. button to download the next workout of that type in your schedule.

   To compete in a race that you have previously scheduled, press the Compete button.

   To re-run a recent iFit workout from your schedule, first press the Track button. Next, press the increase and decrease buttons to select the desired workout. Then, press the Enter button to start the workout.

For more information about the iFit workouts, please see www.iFit.com.

When you select an iFit workout, the display will show the name, duration, maximum speed setting, and distance of the workout. The display will also show the approximate number of calories you will burn during the workout and a profile of the speed settings of the workout.

If you select a competition workout, the display may count down to the beginning of the race.

Note: Each iFit button may also run demo workouts. To use the demo workouts, remove the iFit module from the console and press one of the iFit buttons.

5. **Start the workout.**

   See step 3 on page 23.

   During some workouts, an audio coach may guide you through your workout. You can select a setting for your audio coach (see THE SETTINGS MODE on page 26).

   To stop the workout at any time, press the Stop button. The time will begin to flash in the display. To resume the workout, press the Start button or the Speed increase button. The walking belt will begin to move at the speed setting for the first segment of the workout. When the next segment of the workout begins, the treadmill will automatically adjust to the speed and incline settings for the next segment.

6. **Follow your progress with the displays.**

   See step 5 on page 21.

   The My Trail tab will show a map of the trail you are walking or running or it will show a track and the number of laps you complete.

   During a competition workout, the Competition tab will show your progress in the race. As you race, the top line in the matrix will show how much of the race you have completed. The other lines will show your top four competitors. The end of the matrix represents the end of the race.

7. **Measure your heart rate if desired.**

   See step 6 on page 22.

8. **Turn on the fan if desired.**

   See step 7 on page 22.

9. **When you are finished exercising, remove the key from the console.**

   See step 8 on page 22.

For more information about the iFit mode, go to www.iFit.com.

HOW TO USE THE SOUND SYSTEM

To play music or audio books through the console sound system while you exercise, plug a 3.5 mm male to 3.5 mm male audio cable (not included) into the jack on the console and into a jack on your MP3 player, CD player, or other personal audio player; **make sure that the audio cable is fully plugged in. Note: To purchase an audio cable, see your local electronics store.**

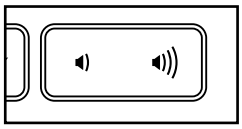

Next, press the play button on your personal audio player. Adjust the volume level using the volume increase and decrease buttons on the console or the volume control on your personal audio player.

If you are using a personal CD player and the CD skips, set the CD player on the floor or another flat surface instead of on the console.

THE SETTINGS MODE

The console features a settings mode that keeps track of treadmill information and allows you to personalize console settings.

1. **Select the settings mode.**

   To select the settings mode, press the Settings button. When the settings mode is selected, the following information will be shown:

   The time display will show the total number of hours that the treadmill has been used.

   The distance display will show the total number of miles (or kilometers) that the walking belt has moved.

   The lower section of the display will show the status of an iFit module. If an iFit module is connected, the display will show the words WIFI MODULE. If a USB module is connected, the display will show the words USB/SD MODULE. If no module is connected, the display will show the words NO IFIT MODULE.

2. **Select the optional screens.**

   While the settings mode is selected, the matrix will display several optional screens. Press the decrease button next to the Enter button to select each of the following screens:

   UNITS—To change the unit of measurement, press the Enter button. To view distance in miles, select ENGLISH. To view distance in kilometers, select METRIC.

   DEMO—The console features a display demo mode, designed to be used if the treadmill is displayed in a store. While the demo mode is turned on, the console will function normally when you plug in the power cord, press the power switch into the reset position, and insert the key into the console. However, when you remove the key, the displays will remain lit, although the buttons will not function. If the demo mode is turned on, the word ON will appear in the matrix. To turn on or turn off the demo mode, press the Enter button.

   CONTRAST LVL—Press the Incline increase and decrease buttons to adjust the contrast level of the display.

   If a module is connected, you may also select the following screen:

   TRAINER VOICE—To turn on or turn off the audio coach, press the Enter button.

   If an iFit module is connected, you may also select the following screens:

   DEFAULT MENU—The default menu will appear when you insert the key into the console or when you press the Home button. Press the Enter button repeatedly to select the manual main screen or the iFit screen as the default menu.

   CHECK WIFI STATUS—Press the Enter button to check the status of your iFit module. The lower display will show the software version number, the network SSID, the network encryption type, the connection status, the wireless signal strength, the IP address of the module, the number of registered users and their names, the results of the DNS lookup, and the status of the iFit server.

   SEND/RECEIVE DATA—To send and receive workouts, workout logs, and updates, press the Enter button. When the process is finished, the words TRANSFERS DONE will appear in the display.

3. **Exit the settings mode.**

   To exit the settings mode, press the Settings button.

HOW TO FOLD AND MOVE THE TREADMILL

HOW TO FOLD THE TREADMILL

To avoid damaging the treadmill, adjust the incline to zero before you fold the treadmill. Then, remove the key and unplug the power cord. CAUTION: You must be able to safely lift 45 lbs. (20 kg) to raise, lower, or move the treadmill.

1. Hold the metal frame firmly in the location shown by the arrow below. **CAUTION: Do not hold the frame by the plastic foot rails. Bend your legs and keep your back straight.**

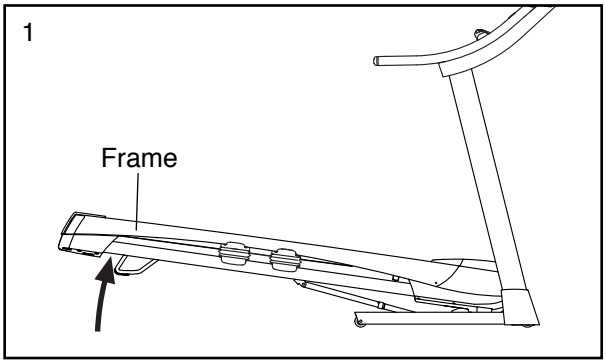

2. Raise the frame until the storage latch locks in the storage position. **CAUTION: Make sure that the storage latch locks.**

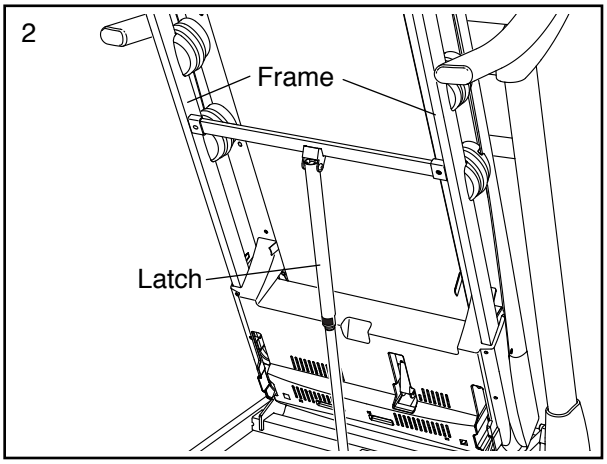

To protect the floor or carpet, place a mat under the treadmill. Keep the treadmill out of direct sunlight. Do not leave the treadmill in the storage position in temperatures above 85° F (30° C).

HOW TO MOVE THE TREADMILL

Before moving the treadmill, fold it as described at the left. **CAUTION: Make sure that the storage latch is locked in the storage position. Moving the treadmill may require two people.**

1. Hold the frame with both hands and carefully push or pull the treadmill to the desired location. **CAUTION: Do not pull on the frame, and do not move the treadmill over an uneven surface.**

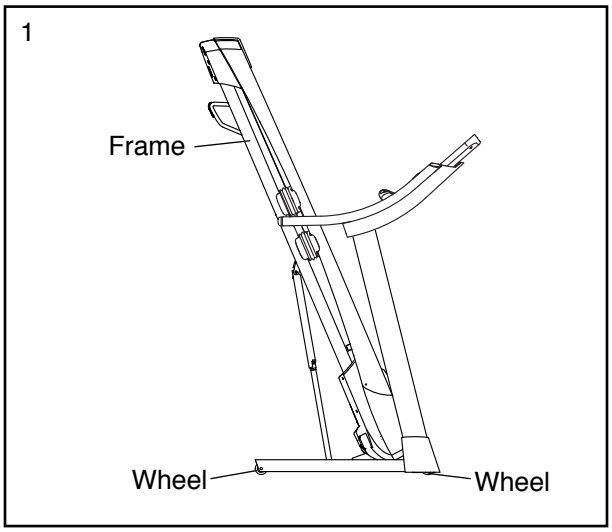

HOW TO LOWER THE TREADMILL FOR USE

1. Press on the upper end of the treadmill frame, press the storage latch with your foot in the location shown, and then allow the frame to lower to the floor.

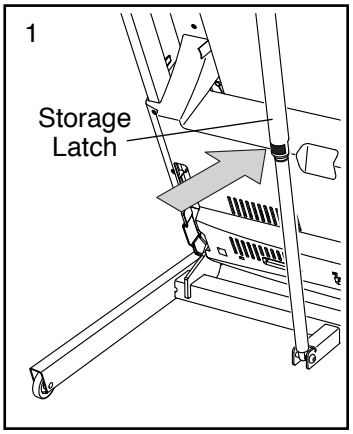

TROUBLESHOOTING

Most treadmill problems can be solved by following the simple steps below. Find the symptom that applies, and follow the steps listed. If further assistance is needed, see the front cover of this manual.

SYMPTOM: The power does not turn on

a. Make sure that the power cord is plugged into a surge suppressor, and that the surge suppressor is plugged into a properly grounded outlet (see page 18). Use only a surge suppressor that meets all of the specifications described on page 18. **IMPORTANT: The treadmill is not compatible with GFCI-equipped outlets and may not be compatible with AFCI-equipped outlets.**

b. After the power cord has been plugged in, make sure that the key is inserted into the console.

c. Check the power switch located on the treadmill frame near the power cord. If the switch protrudes as shown, the switch has tripped. To reset the power switch, wait for five minutes and then press the switch back in.

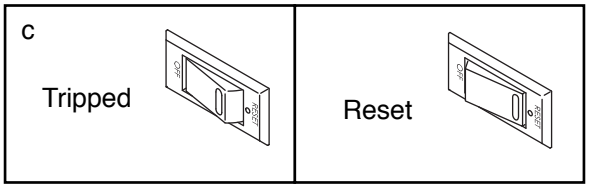

SYMPTOM: The power turns off during use

a. Check the power switch (see the drawing above). If the switch has tripped, wait for five minutes and then press the switch back in.

b. Make sure that the power cord is plugged in. If the power cord is plugged in, unplug it, wait for five minutes, and then plug it back in.

c. Remove the key from the console, and then reinsert it.

d. If the treadmill still will not run, please see the front cover of this manual.

SYMPTOM: The console displays remain lit when you remove the key from the console

a. The console features a display demo mode, designed to be used if the treadmill is displayed in a store. If the displays remain lit when you remove the key, the demo mode is turned on. To turn off the demo mode, hold down the Stop button for a few seconds. If the displays are still lit, see THE SETTINGS MODE on page 26 to turn off the demo mode.

SYMPTOM: The displays of the console do not function properly

a. Remove the key from the console and **UNPLUG THE POWER CORD.** Remove the five #8 x 3/4" Machine Screws (103). Carefully pivot off the Motor Hood (65).

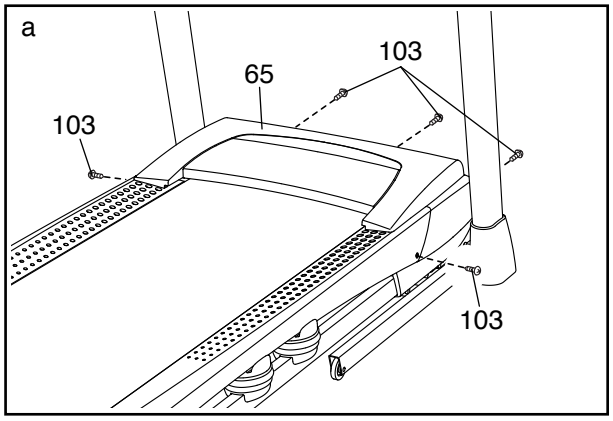

Locate the Reed Switch (52) and the Magnet (50) on the left side of the Pulley (49). Turn the Pulley until the Magnet is aligned with the Reed Switch. **Make sure that the gap between the Magnet and the Reed Switch is about 1/8 in. (3 mm).** If necessary, loosen the #8 x 3/4" Tek Screw (14), move the Reed Switch slightly, and then retighten the Screw. Reattach the Motor Hood (not shown) with the #8 x 3/4" Screws (not shown) and run the treadmill for a few minutes to check for a correct speed reading.

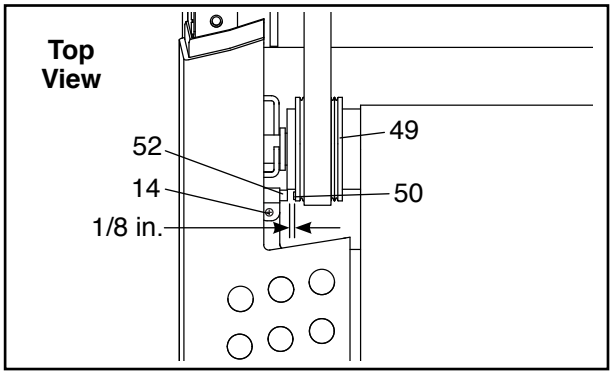

SYMPTOM: The incline of the treadmill does not change correctly

a. Hold down the Stop button and the Speed increase button, insert the key into the console, and then release the Stop button and the Speed increase button. Next, press the Stop button and then press the Incline increase or decrease button. The treadmill will automatically rise to the maximum incline level and then return to the minimum level. This will recalibrate the incline system. If the incline system does not begin calibrating, press the Stop button again, and then press the Incline increase or decrease button again. When the incline system is calibrated, remove the key from the console.

SYMPTOM: The walking belt slows when walked on

a. Use only a surge suppressor that meets all of the specifications described on page 18.

b. If the walking belt is overtightened, treadmill performance may decrease and the walking belt may become damaged. Remove the key and **UNPLUG THE POWER CORD.** Using the hex key, turn both idler roller screws counterclockwise, 1/4 of a turn. When the walking belt is properly tightened, you should be able to lift each edge of the walking belt 2 to 3 in. (5 to 7 cm) off the walking platform. Be careful to keep the walking belt centered. Then, plug in the power cord, insert the key, and run the treadmill for a few minutes. Repeat until the walking belt is properly tightened.

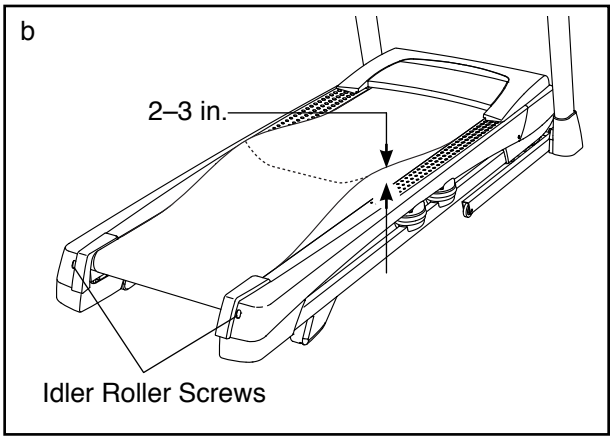

c. Your treadmill features a walking belt coated with high-performance lubricant. **IMPORTANT: Never apply silicone spray or other substances to the walking belt or the walking platform unless instructed to do so by an authorized service representative. Such substances may deteriorate the walking belt and cause excessive wear.** If you suspect that the walking belt needs more lubricant, see the front cover of this manual.

d. If the walking belt still slows when walked on, see the front cover of this manual.

SYMPTOM: The walking belt is off-center or slips when walked on

a. **If the walking belt is off-center,** first remove the key and **UNPLUG THE POWER CORD. If the walking belt has shifted to the left,** use the hex key to turn the left idler roller screw clockwise 1/2 of a turn; **if the walking belt has shifted to the right,** turn the left idler roller screw counterclockwise 1/2 of a turn. Be careful not to overtighten the walking belt. Then, plug in the power cord, insert the key, and run the treadmill for a few minutes. Repeat until the walking belt is centered.

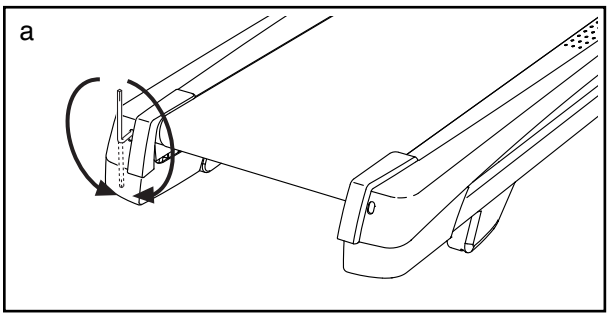

b. **If the walking belt slips when walked on,** first remove the key and **UNPLUG THE POWER CORD.** Using the hex key, turn both idler roller screws clockwise, 1/4 of a turn. When the walking belt is correctly tightened, you should be able to lift each edge of the walking belt 2 to 3 in. (5 to 7 cm) off the walking platform. Be careful to keep the walking belt centered. Then, plug in the power cord, insert the key, and carefully walk on the treadmill for a few minutes. Repeat until the walking belt is properly tightened.

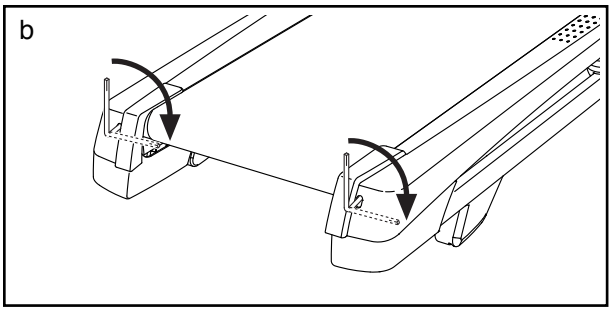

SYMPTOM: The console display has lines running through it

a. If lines appear in the console display, see THE SETTINGS MODE on page 26 and adjust the contrast level of the display.

CLEANING

Regularly clean the treadmill and keep the walking belt clean and dry. First, **press the power switch into the off position and unplug the power cord.** Wipe exterior parts of the treadmill with a damp cloth and a small amount of mild soap. **IMPORTANT: Do not spray liquids directly onto the treadmill. To avoid damage to the console, keep liquids away from the console.** Then, thoroughly dry the treadmill with a soft towel.

EXERCISE GUIDELINES

⚠ WARNING: Before beginning this or any exercise program, consult your physician. This is especially important for persons over age 35 or persons with pre-existing health problems.

The heart rate monitor is not a medical device. Various factors may affect the accuracy of heart rate readings. The heart rate monitor is intended only as an exercise aid in determining heart rate trends in general.

These guidelines will help you to plan your exercise program. For detailed exercise information, obtain a reputable book or consult your physician. Remember, proper nutrition and adequate rest are essential for successful results.

EXERCISE INTENSITY

Whether your goal is to burn fat or to strengthen your cardiovascular system, exercising at the proper intensity is the key to achieving results. You can use your heart rate as a guide to find the proper intensity level. The chart below shows recommended heart rates for fat burning and aerobic exercise.

165	*155*	*145*	*140*	*130*	*125*	*115*	♥
145	*138*	*130*	*125*	*118*	*110*	*103*	♥
125	*120*	*115*	*110*	*105*	*95*	*90*	♥
20	*30*	*40*	*50*	*60*	*70*	*80*	

To find the proper intensity level, find your age at the bottom of the chart (ages are rounded off to the nearest ten years). The three numbers listed above your age define your "training zone." The lowest number is the heart rate for fat burning, the middle number is the heart rate for maximum fat burning, and the highest number is the heart rate for aerobic exercise.

Burning Fat—To burn fat effectively, you must exercise at a low intensity level for a sustained period of time. During the first few minutes of exercise, your body uses carbohydrate calories for energy. Only after the first few minutes of exercise does your body begin to use stored fat calories for energy. If your goal is to burn fat, adjust the intensity of your exercise until your heart rate is near the lowest number in your training zone. For maximum fat burning, exercise with your heart rate near the middle number in your training zone.

Aerobic Exercise—If your goal is to strengthen your cardiovascular system, you must perform aerobic exercise, which is activity that requires large amounts of oxygen for prolonged periods of time. For aerobic exercise, adjust the intensity of your exercise until your heart rate is near the highest number in your training zone.

WORKOUT GUIDELINES

Warming Up—Start with 5 to 10 minutes of stretching and light exercise. A warm-up increases your body temperature, heart rate, and circulation in preparation for exercise.

Training Zone Exercise—Exercise for 20 to 30 minutes with your heart rate in your training zone. (During the first few weeks of your exercise program, do not keep your heart rate in your training zone for longer than 20 minutes.) Breathe regularly and deeply as you exercise; never hold your breath.

Cooling Down—Finish with 5 to 10 minutes of stretching. Stretching increases the flexibility of your muscles and helps to prevent post-exercise problems.

EXERCISE FREQUENCY

To maintain or improve your condition, complete three workouts each week, with at least one day of rest between workouts. After a few months of regular exercise, you may complete up to five workouts each week, if desired. Remember, the key to success is to make exercise a regular and enjoyable part of your everyday life.

SUGGESTED STRETCHES

The correct form for several basic stretches is shown at the right. Move slowly as you stretch—never bounce.

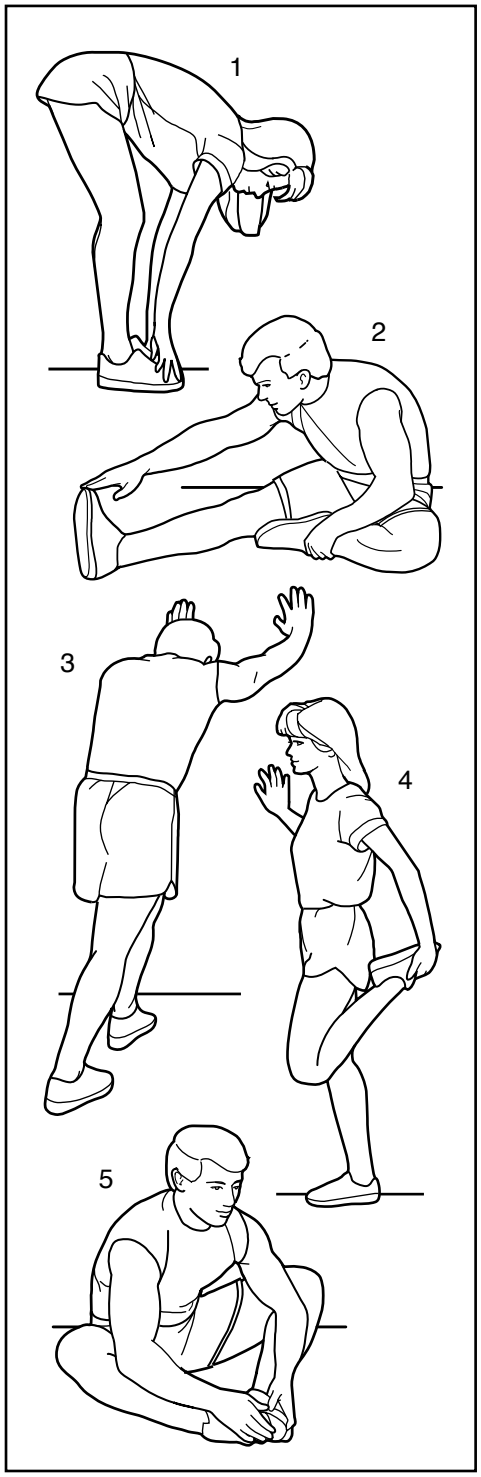

1. Toe Touch Stretch

Stand with your knees bent slightly and slowly bend forward from your hips. Allow your back and shoulders to relax as you reach down toward your toes as far as possible. Hold for 15 counts, then relax. Repeat 3 times. Stretches: Hamstrings, back of knees and back.

2. Hamstring Stretch

Sit with one leg extended. Bring the sole of the opposite foot toward you and rest it against the inner thigh of your extended leg. Reach toward your toes as far as possible. Hold for 15 counts, then relax. Repeat 3 times for each leg. Stretches: Hamstrings, lower back and groin.

3. Calf/Achilles Stretch

With one leg in front of the other, reach forward and place your hands against a wall. Keep your back leg straight and your back foot flat on the floor. Bend your front leg, lean forward and move your hips toward the wall. Hold for 15 counts, then relax. Repeat 3 times for each leg. To cause further stretching of the achilles tendons, bend your back leg as well. Stretches: Calves, achilles tendons and ankles.

4. Quadriceps Stretch

With one hand against a wall for balance, reach back and grasp one foot with your other hand. Bring your heel as close to your buttocks as possible. Hold for 15 counts, then relax. Repeat 3 times for each leg. Stretches: Quadriceps and hip muscles.

5. Inner Thigh Stretch

Sit with the soles of your feet together and your knees outward. Pull your feet toward your groin area as far as possible. Hold for 15 counts, then relax. Repeat 3 times. Stretches: Quadriceps and hip muscles.

NOTES

PART LIST

Model No. PFTL10113.0 R0314A

Key No.	Qty.	Description
1	1	Right Foot Pad
2	58	#8 x 3/4" Screw
3	1	5/16" x 2 1/4" Bolt
4	6	5/16" x 3/4" Screw
5	7	#8 x 5/8" Pan Head Screw
6	1	5/16" x 1 3/4" Bolt
7	6	3/8" x 4" Screw
8	1	Left Foot Pad
9	2	#8 x 1/2" Silver Screw
10	6	#8 x 1/2" Machine Screw
11	16	5/16" Star Washer
12	2	5/16" Nut
13	6	3/8" Star Washer
14	13	#8 x 3/4" Tek Screw
15	2	1/4" x 2 1/2" Screw
16	1	3/8" x 1 1/2" Bolt
17	2	3/8" x 1 1/2" Wheel Bolt
18	1	Console Frame
19	4	#8 x 7/16" Screw
20	2	5/16" Motor Screw
21	2	3/8" Pin
22	2	3/8" x 1" Bolt
23	4	5/16" x 1 3/4" Shoulder Bolt
24	2	#8 X 1 3/4" Screw
25	8	#8 x 3/4" Pan Head Tek Screw
26	2	Rear Cushion Top
27	1	Left Frame Cover
28	2	5/16" x 3 3/4" Screw
29	1	3/8" x 1 3/4" Hex Head Bolt
30	4	5/16" Flat Washer
31	4	5/16" x 2" Screw
32	1	1/4" Star Washer
33	6	3/8" Jam Nut
34	4	5/16" Nut
35	4	Cushion Bottom
36	1	Right Frame Cover
37	6	#8 x 5/8" Screw
38	1	Latch Crossbar
39	4	Cushion
40	1	1/4" x 1" Screw
41	1	Upright Crossbar
42	1	Left Foot Rail
43	1	Caution Decal
44	1	Walking Platform
45	1	Walking Belt
46	2	Belt Guide
47	1	Right Rear Foot
48	4	Cable Tie
49	1	Drive Roller/Pulley
50	1	Magnet
51	1	Reed Switch Clip
52	1	Reed Switch
53	1	Storage Latch
54	1	Drive Motor
55	1	Motor Belt
56	1	Frame
57	1	Left Rear Foot
58	1	Console Ground Wire
59	4	Rubber Cushion
60	1	Right Foot Rail
61	1	Idler Roller
62	2	Front Wheel
63	2	Wheel Spacer
64	1	Console Base
65	1	Motor Hood
66	1	Hood Accent
67	2	Incline Frame Spacer
68	3	Hood Clip
69	1	Incline Motor
70	1	Incline Frame
71	2	Frame Spacer
72	1	Controller
73	1	Left Top Handrail Cap
74	2	Base Cap
75	1	Power Switch
76	1	Power Cord
77	2	Grommet
78	1	Belly Pan
79	1	Right Top Handrail Cap
80	1	Console
81	1	Upright Wire
82	1	Left Base Cover
83	1	Right Base Cover
84	2	Handrail Cap
85	1	Right Handrail
86	1	Left Handrail
87	4	5/16" x 1 1/2" Screw
88	2	#10 x 3/4" Screw
89	1	Left Upright
90	1	Right Upright
91	2	Warning Decal
92	2	#10 Star Washer
93	1	Pulse Crossbar
94	1	Base
95	1	Pulse Crossbar Top
96	4	#8 x 1 1/4" Screw
97	2	Wheel
98	1	Key/Clip
99	10	Cable Tie
100	2	1/4" x 1 1/2" Screw

Key No.	Qty.	Description
101	2	Hood Post
102	1	#8 x 3/8" Screw
103	5	#8 x 3/4" Machine Screw
104	1	Console Base Back
105	1	Electronics Bracket
106	2	Base Pad
107	1	Fan
108	1	Strap
109	2	Incline Motor Spacer
110	2	Handrail Spacer
111	1	Heart Rate Monitor
112	1	Tray
113	1	Left Front Cushion Top
114	1	Right Front Cushion Top
*	–	User's Manual

Note: Specifications are subject to change without notice. For information about ordering replacement parts, see the back cover of this manual. *These parts are not illustrated.

EXPLODED DRAWING A

Model No. PFTL10113.0 R0314A

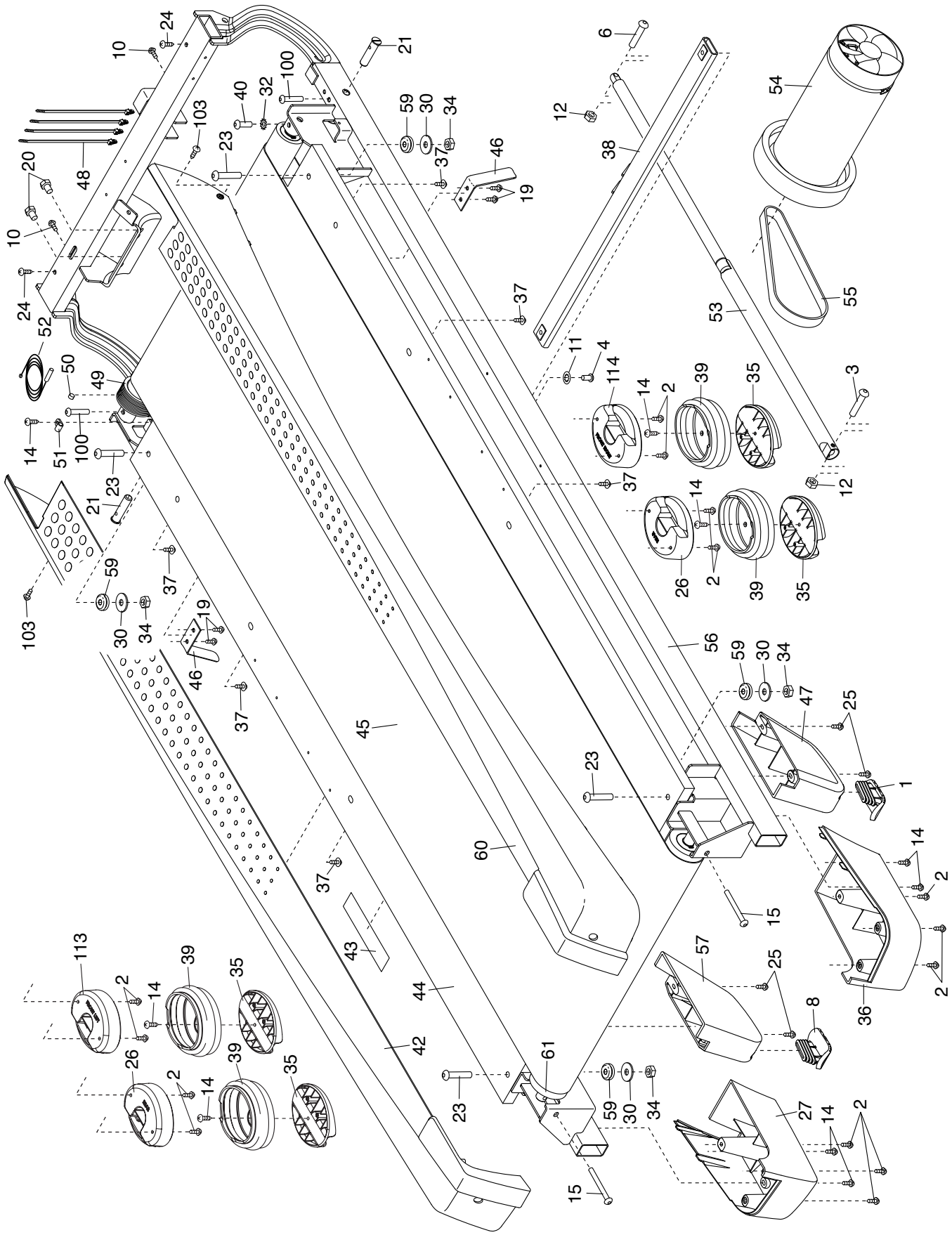

EXPLODED DRAWING B

Model No. PFTL10113.0 R0314A

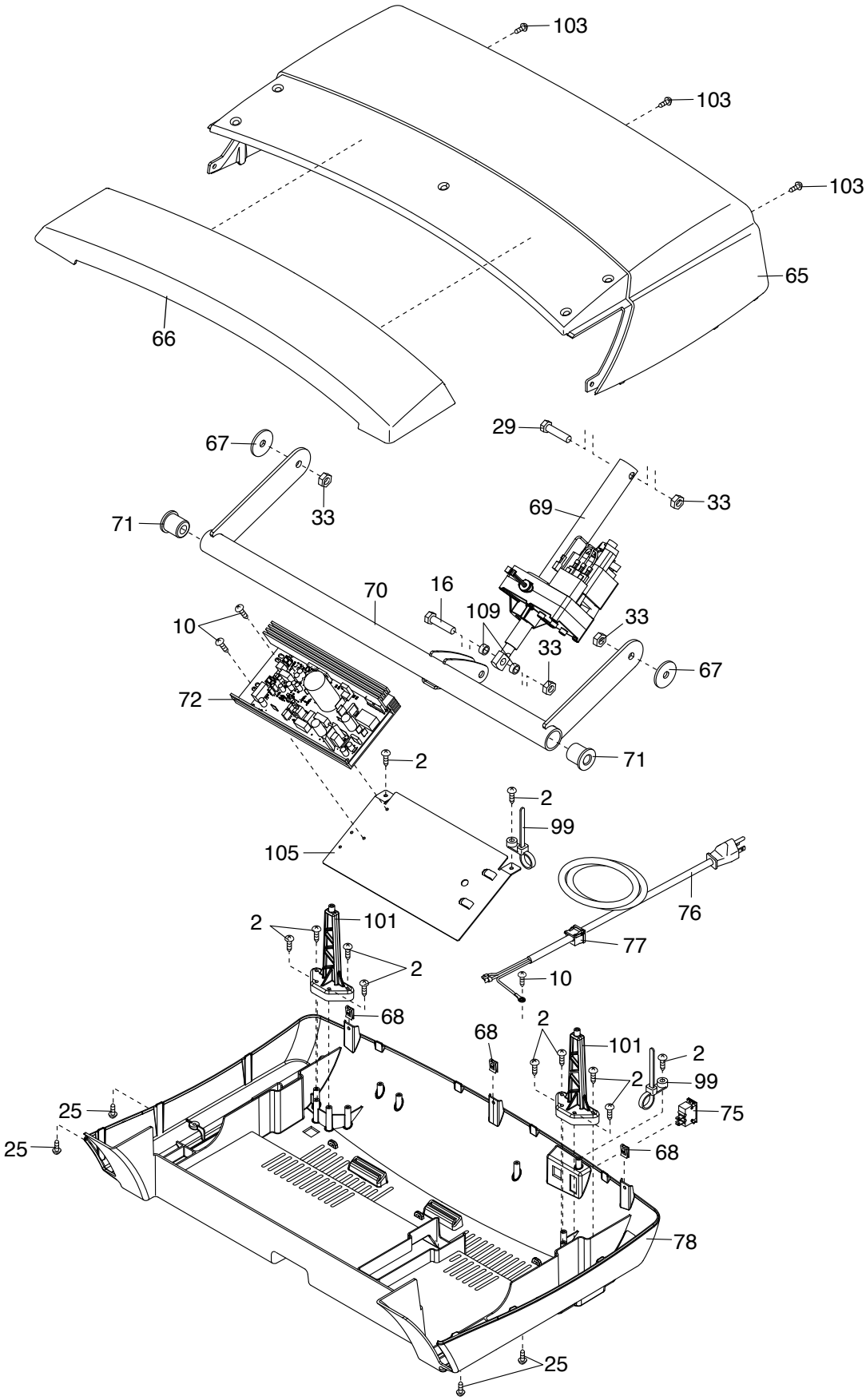

EXPLODED DRAWING C

Model No. PFTL10113.0 R0314A

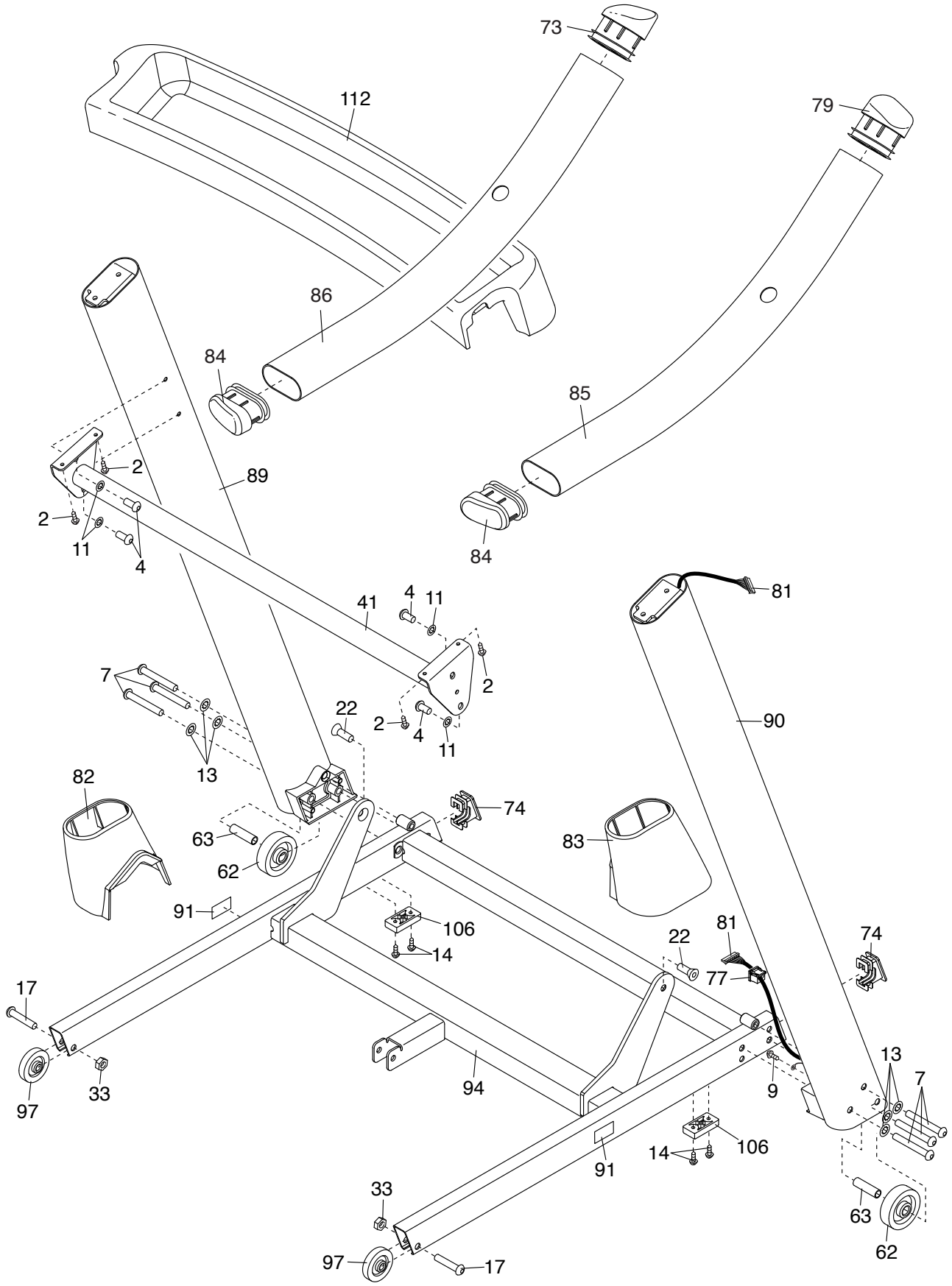

EXPLODED DRAWING D

Model No. PFTL10113.0 R0314A

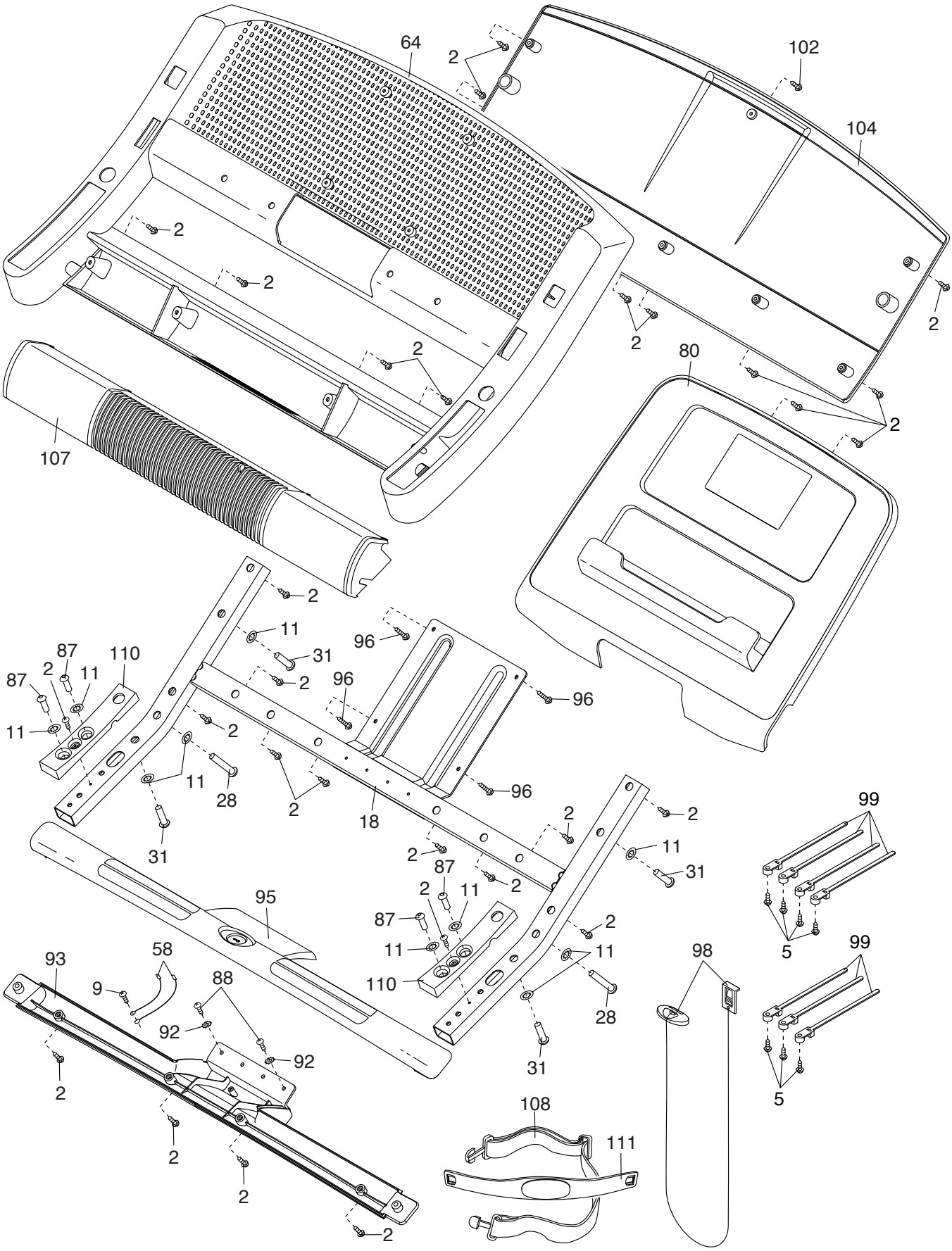

ORDERING REPLACEMENT PARTS

To order replacement parts, please see the front cover of this manual. To help us assist you, be prepared to provide the following information when contacting us:

- the model number and serial number of the product (see the front cover of this manual)
- the name of the product (see the front cover of this manual)
- the key number and description of the replacement part(s) (see the PART LIST and the EXPLODED DRAWING near the end of this manual)

LIMITED WARRANTY

IMPORTANT: To protect your fitness equipment with an extended service plan, see page 6.

ICON Health & Fitness, Inc. (ICON) warrants this product to be free from defects in workmanship and material, under normal use and service conditions. The frame and drive motor are warranted for a lifetime. Parts are warranted for three (3) years from the date of purchase. Labor is warranted for one (1) year from the date of purchase.

This warranty extends only to the original purchaser (customer). ICON's obligation under this warranty is limited to repairing or replacing, at ICON's option, the product through one of its authorized service centers. All repairs for which warranty claims are made must be preauthorized by ICON. If the product is shipped to a service center, freight charges to and from the service center will be the customer's responsibility. If replacement parts are shipped while the product is under warranty, the customer will be responsible for a minimal handling charge. For in-home service, the customer will be responsible for a minimal trip charge. This warranty does not extend to freight damage to the product. This warranty will automatically be voided if the product is used as a store display model, if the product is purchased or transported outside the USA, if all instructions in this manual are not followed, if the product is abused or improperly or abnormally used, or if the product is used for commercial or rental purposes. No other warranty beyond that specifically set forth above is authorized by ICON.

ICON is not responsible or liable for indirect, special, or consequential damages arising out of or in connection with the use or performance of the product; damages with respect to any economic loss, loss of property, loss of revenues or profits, loss of enjoyment or use, or costs of removal or installation; or other consequential damages of any kind. Some states do not allow the exclusion or limitation of incidental or consequential damages. Accordingly, the above limitation may not apply to the customer.

The warranty extended hereunder is in lieu of any and all other warranties, and any implied warranties of merchantability or fitness for a particular purpose are limited in their scope and duration to the terms set forth herein. Some states do not allow limitations on how long an implied warranty lasts. Accordingly, the above limitation may not apply to the customer.

This warranty provides specific legal rights; the customer may have other rights that vary from state to state.

ICON Health & Fitness, Inc., 1500 S. 1000 W., Logan, UT 84321-9813

Part No. 353828 R0314A

Printed in USA © 2014 ICON IP, Inc.